WODROL

Wodrol · Wałcz

CATALOGUE

OVERGROUND HYDRANT DN 100

CAT NO. HD – 100

Application

Water supply installation for fire protection, potable water or non-aggressive fluids supply that do not contain solids

Design features

* **hydrant chamber and head – gray cast iron GJL-250**
* **column – structural steel**
* **mandrel sealing – O-rings**
* **rolled mandrel of stainless steel (2H13)**
* **closed from the bottom**
* **self-draining at full closing**
* **pipe – structure steel with anti-corrosion coating**
* **single choke – cast iron vulcanized with EPDM rubber**
* **anti-corrosion UV resistant coating**

Technical specifications, standards

* **workmanship, requirements, test methods, application as per PN-EN 14384:2009, PN-EN 1074-6:2009**
* **flange connection as per PN-EN 1092-2:1999**
* **nominal pressure PN 10/16**
* **anti-corrosion coating – powder paint (coating)**
* **maximum driving torque MOT – 50Nm**
* **minimum torsional moment mST – 250Nm**
* **Kv and draining time as per EN 14384:2009**

OVERGROUND HYDRANT DN 100

CAT NO. HD – 100

No.	Description	Pcs	Material	Standard
1	Pipe cap Ø100	1	Polyethylene	PN-EN ISO 17855-1:2014-12
2	Body twisted	1	EN-GJS-500	PN-EN 1563:2018-10
3	Spindle nut	1	MO 58	PN-EN 12164:2011
4	Vulcanized hydrant GJS-500 piston	1	EN-GJS-500 EPDM	PN-EN 1563:2018-10 PN-ISO 1629:2017-06
5	Shield	1	X6CR17	PN-EN 10088-1:2014-12
6	M6x12 bolt	1	A2	DIN 933
7	Hydrant chamber	1	EN-GJL-250	PN-EN 1561:2012
8	Pipe Ø32	1	L235 galvanized	PN-EN 10224:2006
9	Pipe Ø133	1	12X	PN-EN 10219-1:2007
10	Rubber gasket	2	NBR	PN-ISO 1629:2017-06
11	Hydrant head	1	EN-GJL-250	PN-EN 1561:2012
12	M8x15 bolt	1	Galvanized steel	PN-EN ISO 4017:2014-09
13	Cotter	1	Galvanized steel	PN-EN ISO 1234:2001
14	Hand wheel	1	EN-GJL-250	PN-EN 1561:2012
15	Chain / cord	2	Galvanized steel	DIN 1942 / PN-EN 12385-1+A1:2009
16	Threaded mandrel	1	2H13	PN-EN 10088-1:2014-12
17	Washer	1	St-3.	PN-EN ISO 7091:2003
18	Choke	1	MO 58	PN-EN 12164:2011
19	O-ring 025x4	2	NBR	PN-ISO 1629:2017-06
20	O-ring 038x4	1	NBR	PN-ISO 1629:2017-06
21	Cover 75	1set	Al / GJL	PN-M-51024:2015-07
22	Cover with vent valve	1 set	Al / GJL	PN-M-51024:2015-07
23	Cover 110	1 set	Al / GJL	PN-M-51024:2015-07
24	Aluminum thimbles 75	2 sets	Al	PN-EN 1706:2020-10
25	Aluminum thimbles 110	1 set	Al	PN-EN 1706:2020-10

DN	H+/-50	Installation depth
DN 100	1924 mm	1250 mm
	2174 mm	1500 mm
	2474 mm	1800 mm

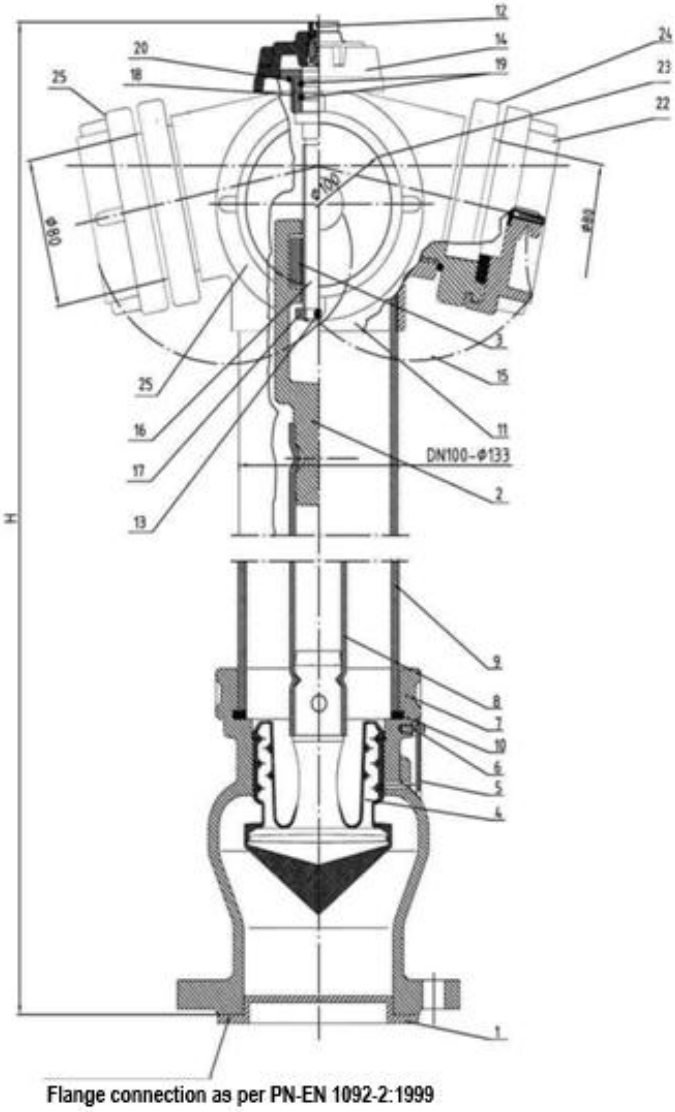

OVERGROUND HYDRANT DN 80

CAT NO. HD – 101

Application

Water supply installation for fire protection, potable water or non-aggressive fluids supply that do not contain solids

Design features

* **hydrant chamber and head – gray cast iron GJL-250**
* **column – structural steel**
* **mandrel sealing – O-rings**
* **rolled mandrel of stainless steel (2H13)**
* **closed from the bottom**
* **self-draining at full closing**
* **pipe – structure steel with anti-corrosion coating**
* **single choke – cast iron vulcanized with EPDM rubber**
* **anti-corrosion UV resistant coating**

Technical specifications, standards

* **workmanship, requirements, test methods, application as per PN-EN 14384:2009, PN-EN 1074-6:2009**
* **flange connection as per PN-EN 1092-2:1999**
* **nominal pressure PN 10/16**
* **anti-corrosion coating – powder paint (coating)**
* **maximum driving torque MOT – 50Nm**
* **minimum torsional moment mST – 250Nm**
* **Kv and draining time as per EN 14384:2009**

Przedsiębiorstwo Inżynieryjno - Przemysłowe "WODROL" Wałcz Spółka z o.o.
Chełmińska street No. 6, 78-600 Wałcz, Poland
NIP (TAX ID) 765 10 71 186
(067) 258 32 91, (067) 250 07 78
handel@wodrol-walcz.pl, wodrol@wodrol-walcz.pl
www.wodrol-walcz.pl

OVERGROUND HYDRANT DN 80

CAT NO. HD – 101

No.	Description	Pcs	Material	Standard
1	Pipe cap Ø80	1	Polyethylene	PN-EN ISO 17855-1:2014-12
2	Rubber plug	1	NBR / EPDM	PN-ISO 1629:2017-06
3	Brass nut	1	MO 58	PN-EN 12164:2011
4	Vulcanized hydrant piston	1	EN-GJS-500 / EPDM	PN-EN 1563:2018-10 PN-EN 1561:2012
5	Shield	1	X6CR17	PN-EN 10088-1:2014-12
6	M6x12 bolt	1	A2	DIN 933
7	Hydrant chamber	1	EN-GJL-250	PN-EN 1561:2012
8	Spindle – galvanized pipe or rod	1	L235 galvanized	PN-EN 10224:2006 PN-EN 1025-1:2007
9	Pipe Ø108	1	12X	PN-EN-10219-1:2007
10	Rubber gasket	2	NBR	PN-ISO 1629:2017-06
11	Hydrant head	1	EN-GJL-250	PN-EN 1561:2012
12	M8x15 bolt	1	Galvanized steel	PN-EN ISO 4017:2014-09
13	Spring plug	1	Galvanized steel	PN-EN 8752:2009
14	Hand wheel	1	EN-GJL-250	PN-EN 1561:2012
15	Washer	1	Galvanized steel	PN-EN ISO 7091:2003
16	Threaded mandrel	1	2H13	PN-EN 10088-1:2014-12
17	Bashing	1	St-3.	PN-EN 12164:2011
18	Chain/Cord	1	MO 58	DIN 1942 PN-EN 12385-1+A1:2009
19	Sealing ring O-ring	2	NBR	PN-ISO 1629:2017-06
20	Hand wheel mandrel	1	NBR	PN-EN 10088-1:2014-12
21	Cover with vent valve	1 set	Al / GJL	PN-M-51024:2015-07
22	Cover	1 set	Al / GJL	PN-M-51024:2015-07
23	Thimbles 75	2 sets	Al / GJL	PN-EN 1706:2020-10

DN	H+/-30	Installation depth
DN 80	1900 mm	1250 mm
	2150 mm	1500 mm
	2450 mm	1800 mm

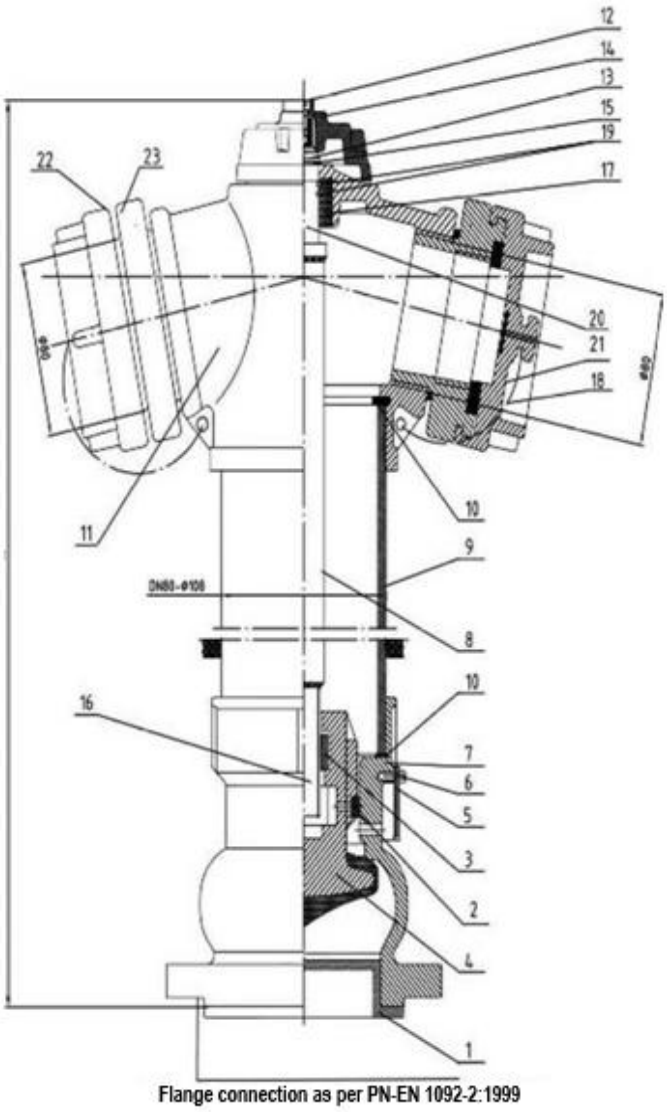

UNDERGROUND HYDRANT DN 100

CAT NO. HD – 104

Application

Water supply installation for fire protection, potable water or non-aggressive fluids supply that do not contain solids

Design features

* **hydrant chamber and head – gray cast iron GJL-250**
* **column – structural steel**
* **mandrel sealing – O-rings**
* **rolled mandrel of stainless steel (2H13)**
* **closed from the bottom**
* **self-draining at full closing**
* **single choke closing**
* **closing choke – cast iron vulcanized with EPDM rubber**
* **anti-corrosion UV resistant coating**
* **pipe – structure steel with anti-corrosion coating**

Technical specifications, standards

* **workmanship, requirements, test methods, application as per PN-EN 14339:2009, PN-EN 1074-6:2009**
* **flange connection as per PN-EN 1092-2:1999**
* **nominal pressure PN 10/16**
* **anti-corrosion coating – powder paint (coating)**
* **compiles with PN-EN 14339:2009, PN-EN 1074-6:2009**
* **Kv and draining time as per EN 14339:2009**
* **control key DIN 3223**
* **the claw as per (DIN 3221 or STAS 695-80)**

UNDERGROUND HYDRANT DN 100

CAT NO. HD – 104

No.	Description	Pcs	Material	Standard
1	Pipe cap	1	PE	PN-EN 17855-1:2014-12
2	Hydrant bottom body	1	EN-GJL-250	PN-EN 1561:2012
3	Vulcanized hydrant piston	1	EN-GJS-500 EPDM	PN-EN 1563:2018-10
4	Shield	1	X6CR17	PN-EN 10088-1:2014-12
5	M16x12 bolt	1	A2	DIN 933
6	Rubber gasket	2	NBR / EPDM	PN-ISO 1629:2017-06
7	Galvanized pipe	1	L235	PN-EN 10224:2006
8	Pipe Ø133	1	12X	PN-EN10219-1:2007
9	Body twisted	1	EN-GJS-500	PN-EN 1563:2018-10
10	Hand wheel mandrel	1	2H13	PN-EN 10088-1:2014-12
11	Hydrant head	1	EN-GJL-250	PN-EN 1561:2012
12	Spindle nut	1	MO	PN-EN 12164:2016-10
13	M12x60 bolt	2	Fe / Zn 10	PN-EN-ISO 4017:2014-09
14	Nut	2	Fe / Zn 10	PN-EN ISO 4032-2013
15	Washer	2	Fe / Zn 10	PN-EN ISO 7091:2003
16	Rubber gasket	1	NBR / EPDM	PN-ISO 1629:2017-06
17	Ring	1	MO 58 / Tarnamid	PN-EN 12164:2016-10
18	Steel chain/cord	1	Fe / Zn 10	DIN 1942 PN-EN 12385-1+A1:2009
19	Claw	1	EN-GJS-500 EN-GJL-250	PN-EN 1563:2018-10 PN-EN 1561:2012
20	Safety cover	1	PE	PN-EN 17855-1:2014-12
21	Bolt (allen)	4	St4	PN-EN ISO 4762:2006
22	Cap	1	EN-GJS-500	PN-EN 1563:2018-10
23	Pin	1	45	PN-EN ISO 2338:2003
24	Steel washer	1	Fe / Zn 10	PN-EN ISO 7091:2003
25	Choke	1	Mose	PN-EN 12164:2016-10
26	O-ring	2	NBR / EPDM	PN-ISO 1629:2017-06
27	Washer	1	Tarnamid MO	PN-EN 12164:2016-10
28	Cover rubber gasket	1	NBR / EPDM	PN-ISO 1629:2017-06

DN	H+/-30	Installation depth
DN 100	750 mm	1000 mm
	1000 mm	1250 mm
	1250 mm	1500 mm

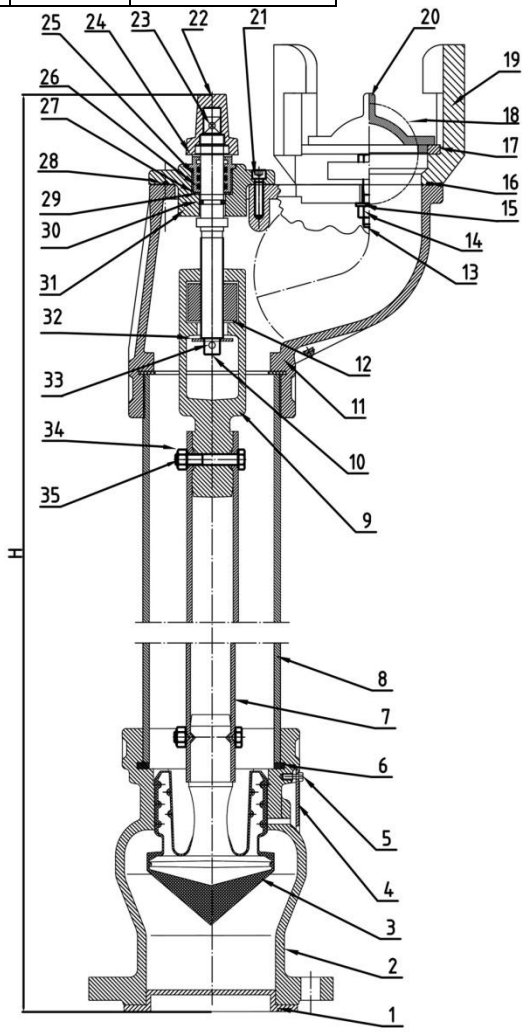

29	Washer	1	Tarnamid MO	PN-EN 12164:216-10
30	O-ring	1	NBR / EPDM	PN-ISO 1629:2017-06
31	Hydrant cover	1	EN-GJS-500 EN-GJL-250	PN-EN 1563:2018-10 PN-EN 1561:2012
32	Washer	1	Fe / Zn 10	PN-EN ISO 7091:2003
33	Pin	1	45	PN-EN ISO 2338:2003
34	Nut	2	A2	ISO 4032
35	Bolt	2	A2	ISO 4014

UNDERGROUND HYDRANT DN 80

CAT NO. HD – 103

Application

Water supply installation for fire protection, potable water or non-aggressive fluids supply that do not contain solids

Design features

* **hydrant chamber and head – gray cast iron GJL-250**
* **column – structural steel**
* **mandrel sealing – O-rings**
* **rolled mandrel of stainless steel (2H13)**
* **closed from the bottom**
* **self-draining at full closing**
* **single choke closing**
* **closing choke – cast iron vulcanized with EPDM rubber**
* **anti-corrosion UV resistant coating**
* **pipe – structure steel with anti-corrosion coating**

Technical specifications, standards

* **workmanship, requirements, test methods, application as per PN-EN 14339:2009, PN-EN 1074-6:2009**
* **flange connection as per PN-EN 1092-2:1999**
* **nominal pressure PN 10/16**
* **anti-corrosion coating – powder paint (coating)**
* **maximum driving torque MOT – 50Nm**
* **minimum torsional moment mST – 250Nm**
* **Kv and draining time as per EN 14339:2009**
* **dog socket as per PN-EN 1563:2018-10**

UNDERGROUND HYDRANT DN 80

CAT NO. HD – 103

No.	Description	Pcs	Material	Standard
1	Pipe cap Ø80	1	Polyethylene	PN-EN ISO 17855-1:2014-12
2	Rubber plug	1	NBR / EPDM	PN-ISO 1629:2017-06
3	Brass nut	1	MO 58	PN-EN 12164:2011
4	Vulcanized hydrant piston / EPDM	1	EN-GJS-500 EN-GJL-250	PN-EN 1563:2018-10 PN-EN 1561:2012
5	Shield	1	X6CR17	PN-EN 10088-1:2014-12
6	M6x12 bolt	1	A2	DIN 933
7	Hydrant chamber	1	EN-GJL-250	PN-EN 1561:2012
8	Spindle – galvanized pipe or rod Ø22	1	L235 galvanized S235RJ	PN-EN 10224:2006 PN-EN 10025-1:2007
9	Pipe Ø108	1	12X	PN-EN-10219-1:2007
10	Rubber gasket Ø108	2	NBR / EPDM	PN-ISO 1629:2017-06
11	Hydrant head	1	EN-GJL-250	PN-EN 1561:2012
12	M12x60 bolt	2	Galvanized steel	PN-EN ISO 4017:2014-09
13	Steel washer Ø16	1	Galvanized steel	PN-EN ISO 7091:2003
14	Rubber gasket Ø80x7x4	1	NBR / EPDM	PN-ISO 1629:2017-06
15	Ring	1	MO 59 / Tarnamid	PN-EN 12164:2011
16	Safety cover	1	Polyethylene	PN-EN ISO 17855-1:2014-12
17	Hydrant hook	1	EN-GJS-500 EN-GJL-250	PN-EN 1563:2018-10 PN-EN 1561:2012
18	Steel chain/cord	1	Galvanized steel	DIN 1942 / PN-EN 12385-1+A1:2009
19	Steel pin Ø6	1	Galvanized steel	PN-EN ISO 2338:2003
20	Threaded mandrel	1	2H13	PN-EN 10088-1:2014-12
21	Sealing ring O-ring	2	NBR / EPDM	PN-ISO 1629:2017-06
22	Cap	1	EN-GJL-250	PN-EN 1561:2012 PN-EN 1563:2018-10
23	Hand wheel mandrel	1	2H13	PN-EN 10088-1:2014-12
24	Washer	2	Steel	PN-EN ISO 7091:2003
25	Bashing	1	MO 58 / Tarnamid	PN-EN 12164:2011

DN	H+/-30	Installation depth
DN 80	750 mm	1000 mm
	1000 mm	1250 mm
	1250 mm	1500 mm

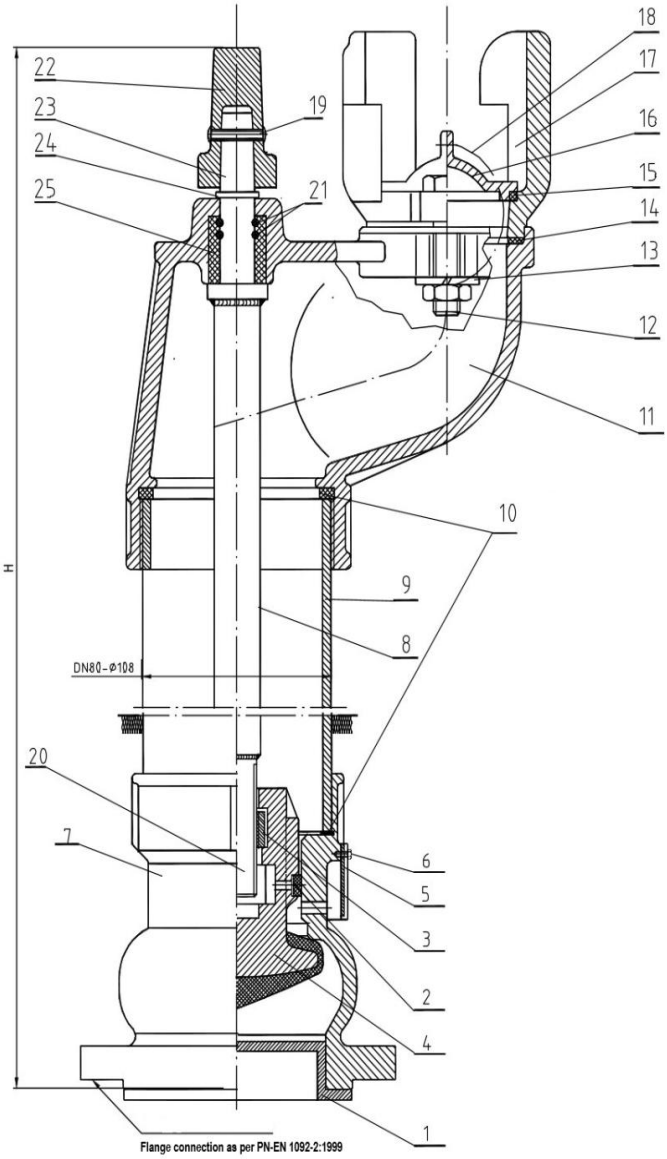

Przedsiębiorstwo Inżynieryjno - Przemysłowe “WODROL” Wałcz Spółka z o.o.
Chełmińska street No. 6, 78-600 Wałcz, Poland
NIP (TAX ID) 765 10 71 186
(067) 258 32 91, (067) 250 07 78
handel@wodrol-walcz.pl, wodrol@wodrol-walcz.pl
www.wodrol-walcz.pl

FLANGED END WEDGE GATE VALVE WITH SOFT SEALING PN 10/16 – F5

CAT NO. ZS – 200

Application

Potable water supply systems, industrial system for other inert media up to 50°C

Design features

* **diameter DN 50 – DN 250**
* **housing and cover – gray cast iron GJL-250**
* **stainless steel spindle with rolled screw thread**
* **spindle sealing – O-rings**
* **wedge – EPDM / NBR coated cast iron**
* **straight bore**
* **Allen screws – grade 8.8 galvanized with cap**
* **anti-corrosion protection – powder coated RAL 5005**
* **leakage class A**

Technical specifications, standards

* **face-to-face dimensions to PN-EN 558:2017-04**
* **series 15 – (F5)**
* **nominal pressure PN 10/16**
* **temperature – max. 50°C**
* **flange end connection to PN-EN 1092-2:1999**
* **all components powder coated**
* **horizontal or vertical installation**

FLANGED END WEDGE GATE VALVE WITH SOFT SEALING PN 10/16 – F5

CAT NO. ZS – 200

No.	Description	Pcs	Material	Standard
1	Housing	1	EN-GJL-250	PN-EN 1561:2012
2	Cover	1	EN-GJL-250	PN-EN 1561:2012
3	Wedge, NBR or EPDM coated cast iron	1	EN-GJS-500/ NBR / EPDM	PN-EN 1563:2018-10 PN-ISO 1629:2017-06
4	Spindle	1	X20CR13	PN-EN 10088-1:2014-12
5	Cover seal	1	NBR / EPDM	PN-ISO 1629:2017-06
6	Nut	1	MO 58	PN-EN 12164:2011
7	Protective seal	1	EPDM	PN-ISO 1629:2017-06
8	Sealing ring O-ring	3	NBR / EPDM	PN-ISO 1629:2017-06
9	Washer	1	Tarnamid	PN-EN ISO 17855-1:2014-12
10	Screw plug	1	MO 58	PN-EN 12164:2011
11	Hex socket screw	4	Galvanized	PN-EN ISO 4762:2006
12	Cap	4	PVC	PN-EN 12351:2010
13	Cap	2	PVC	PN-EN 12351:2010
14	Sleeve	1	Tarnamid	PN-EN ISO 17855-1:2014-12

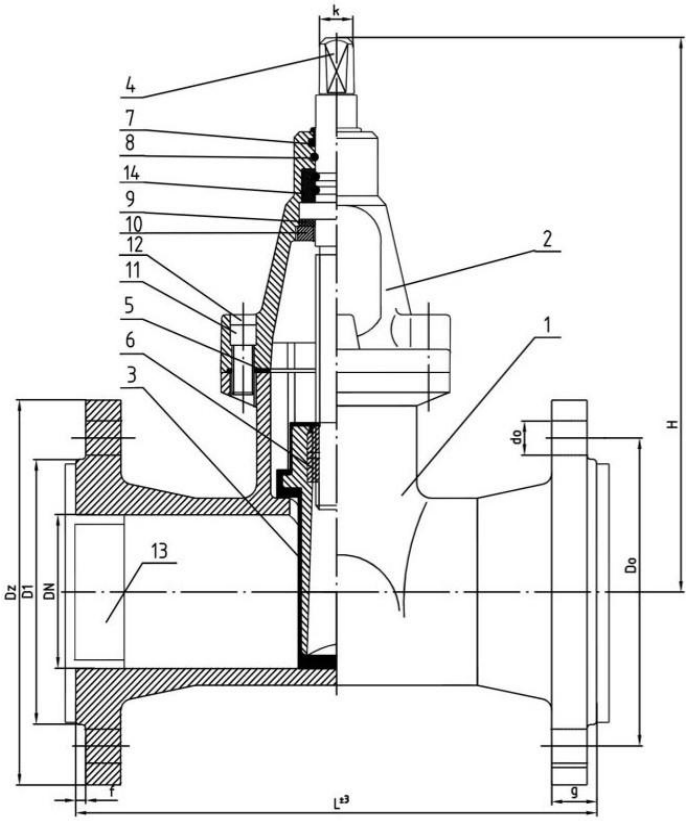

Gate valve	DN	H	Dz	Dl	L	g	f	Do	do	holes	k
DN 50 PN 10/16	50	230	165	102	250	20	3	125	18	4	16
DN 80 PN 10/16	80	280	200	138	280	22	3	160	18	8	17.4
DN 100 PN 10/16	100	340	220	158	300	24	3	180	18	8	17.4
DN 150 PN 10/16	150	410	285	212	350	26	3	240	22	8	19.4

FLANGED END WEDGE GATE VALVE WITH SOFT SEALING PN 10/16 – F4

CAT NO. ZS – 201

Application

Potable water supply systems, industrial system for other inert media up to 50°C

Design features

* diameter DN 50 – DN 250
* DN 50 – DN 200 housing and cover – gray cast iron GJL-250
* DN 250 housing and cover – ductile cast iron GJS-500
* stainless steel spindle with rolled screw thread
* spindle sealing – O-rings
* wedge – EPDM / NBR coated cast iron
* straight bore
* Allen screws – grade 8.8 galvanized with cap
* anti-corrosion protection – powder coated RAL 5005
* leakage class A

Technical specifications, standards

* face-to-face dimensions to PN-EN 558:2017-04
* series 14 – (F4)
* nominal pressure PN 10/16
* temperature – max. 50°C
* flange end connection to PN-EN 1092-2:1999
* all components powder coated
* horizontal or vertical installation

FLANGED END WEDGE GATE VALVE WITH SOFT SEALING PN 10/16 – F4

CAT NO. ZS – 201

No.	Description	Pcs	Material	Standard
1	Housing	1	EN-GJL-250	PN-EN 1561:2012
2	Cover	1	EN-GJL-250	PN-EN 1561:2012
3	Wedge, NBR or EPDM coated cast iron	1	EN-GJS-500 NBR / EPDM	PN-EN 1563:2018-10 PN-ISO 1629:2017-06
4	Spindle	1	X20CR13	PN-EN 10088-1:2014-12
5	Cover seal	1	NBR / EPDM	PN-ISO 1629:2017-06
6	Nut	1	MO 58	PN-EN 12164:2011
7	Protective seal	1	EPDM	PN-ISO 1629:2017-06
8	Sealing ring O-ring	3	NBR / EPDM	PN-ISO 1629:2017-06
9	Washer	1	Tarnamid	PN-EN ISO 17855-1:2014-12
10	Screw plug	1	MO 58	PN-EN 12164:2011
11	Hex socket screw	4	Galvanized	PN-EN ISO 4762:2006
12	Cap	4	PVC	PN-EN 12351:2010
13	Cap	2	PVC	PN-EN 12351:2010
14	Sleeve	1	Tarnamid	PN-EN ISO 17855-1:2014-12

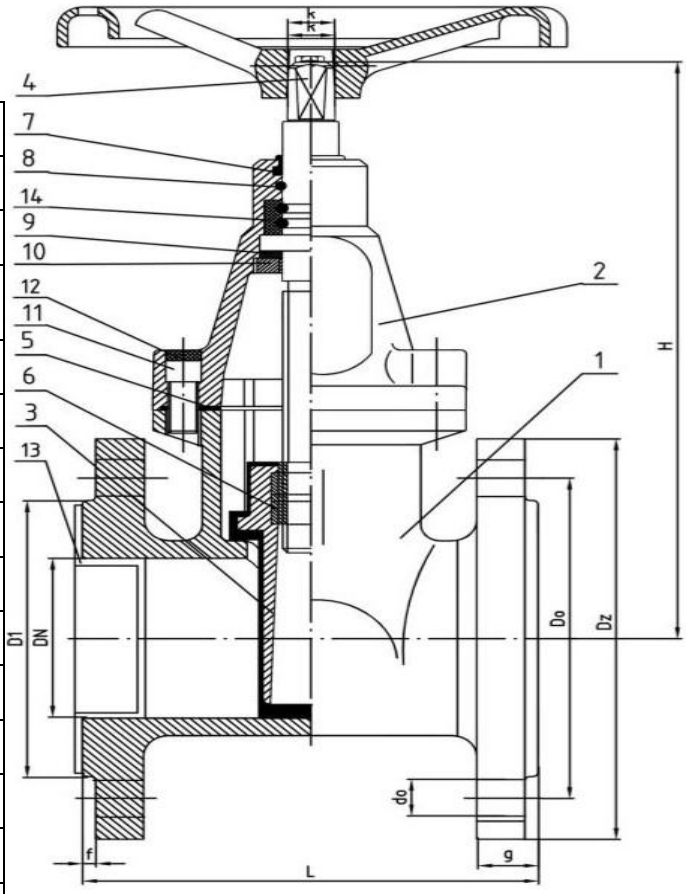

Gate valve	DN	H	Dz	Dl	L	g	f	Do	do	No. of ports	k
DN 50 PN 10/16	50	245	165	102	150	20	3	125	18	4	16
DN 80 PN 10/16	80	300	200	138	180	22	3	160	18	8	17.4
DN 100 PN 10/16	100	340	220	158	190	24	3	180	18	8	17.4
DN 150 PN 10/16	150	440	285	212	210	26	3	240	22	8	19.4
DN 200 PN 10	200	540	340	268	230	26	3	295	22	8	24.4
DN 250 PN 10	250	620	405	320	250	26	3	350	22	12	24.4

THREADED GATE VALVE DN 25 – DN 32 PN 10/16

CAT NO. ZS – 204

Application

Drinking water supply systems, industrial systems transporting other chemically inert liquids

Design features

* **range of diameters DN 25 – DN 32**
* **body and bonnet made of ductile cast iron GJS-500**
* **stem made of stainless steel with a rolled thread**
* **stem sealed with O-rings**
* **wedge made of cast iron, the entire surface coated with EPDM / NBR rubber**
* **straight-through flow**
* **anti-corrosion protection – powder coated RAL 5005**

Technical specifications, standards

* **length as shown in the drawing**
* **nominal pressure PN 10/16**
* **temperature – max. 50°C**
* **threaded coupling acc. to PN-EN ISO 228-1:2005**
* **all components powder coated**

THREADED GATE VALVE DN 25 – DN 32 PN 10/16

CAT NO. ZS – 204

No.	Description	Pcs	Material	Standard
1	Body	1	EN-GJS-500	PN-EN 1563:2017-06
2	Cover	1	EN-GJS-500	PN-EN 1563:2017-06
3	Wedge, NBR or EPDM coated cast iron	1	EN-GJS-500 NBR / EPDM	PN-EN 1563:2018-10 PN-ISO 1629:2017-06
4	Spindle	1	X20CR13	PN-EN 10088-1:2014-12
5	Nut	1	MCS3	PN-EN 12164:2011
6	Protective seal	1	NBR	PN-ISO 1629:2017-06
7	Sealing ring O-ring	4	NBR / EPDM	PN-ISO 1629:2017-06
8	Washer	1	Tarnamid	PN-EN ISO 17855-1:2014-12
9	Screw plug	1	MO 58	PN-EN 12164:2011
10	Sleeve	1	Tarnamid	PN-EN ISO 17855-1:2014-12

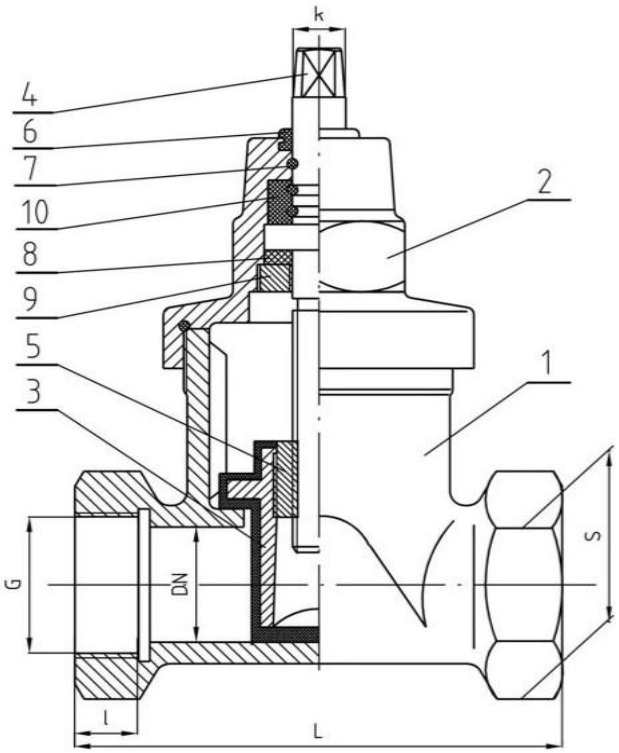

DN	H	L	l	S	G	k
25	170	135	22	55	1"	12.4
32	170	135	22	55	11/4"	12.4

THREADED GATE VALVE DN 40 – DN 50 PN 10/16

CAT NO. ZS – 205

Application

Drinking water supply systems, industrial systems transporting other chemically inert liquids

Design features

* **range of diameters DN 40 – DN 50**
* **DN 40 body and cover made of ductile cast iron GJS-500**
* **DN 50 body and cover made of gray cast iron GJL-250 or ductile cast iron GJS-500**
* **stem made of stainless steel with a rolled thread**
* **stem sealed with O-rings**
* **wedge made of cast iron, the entire surface coated with EPDM / NBR rubber**
* **straight-through flow**
* **allen key bolts – grade 8.8 galvanized, secured against contamination with caps**
* **anti-corrosion protection – powder coated RAL 5005**

Technical specifications, standards

* **length as shown in the drawing**
* **nominal pressure PN 10/16**
* **temperature – max. 50°C**
* **threaded coupling acc. to PN-EN ISO 228-1:2005**
* **all components powder coated**

THREADED GATE VALVE DN 40 – DN 50 PN 10/16

CAT NO. ZS – 205

No.	Description	Pcs	Material	Standard
1	Body	1	EN-GJS-500 EN-GJL-250	PN-EN 1563:2018-10 PN-EN 1561:2012
2	Cover	1	EN-GJS-500 EN-GJL-250	PN-EN 1563:2018-10 PN-EN 1561:2012
3	Wedge, NBR or EPDM coated cast iron	1	EN-GJS-500 NBR / EPDM	PN-EN 1563:2018-10 PN-ISO 1629:2017-06
4	Spindle	1	X20CR13	PN-EN 10088-1:2014-12
5	Cover rubber	1	NBR / EPDM	PN-ISO 1629:2017-06
6	Nut	1	MO 58	PN-EN 12164:2011
7	Protective seal	1	EPDM	PN-ISO 1629:2017-06
8	Sealing ring O-ring	3	NBR / EPDM	PN-ISO 1629:2017-06
9	Washer	1	Tarnamid	PN-EN ISO 17855-1:2014-12
10	Screw plug	1	MO 58	PN-EN 12164:2011
11	Screw	4	Galvanized	PN-EN ISO 4762:2006
12	Plug	4	PVC	PN-EN 12351:2010
13	Sleeve	1	Tarnamid	PN-EN ISO 17855-1:2014-12

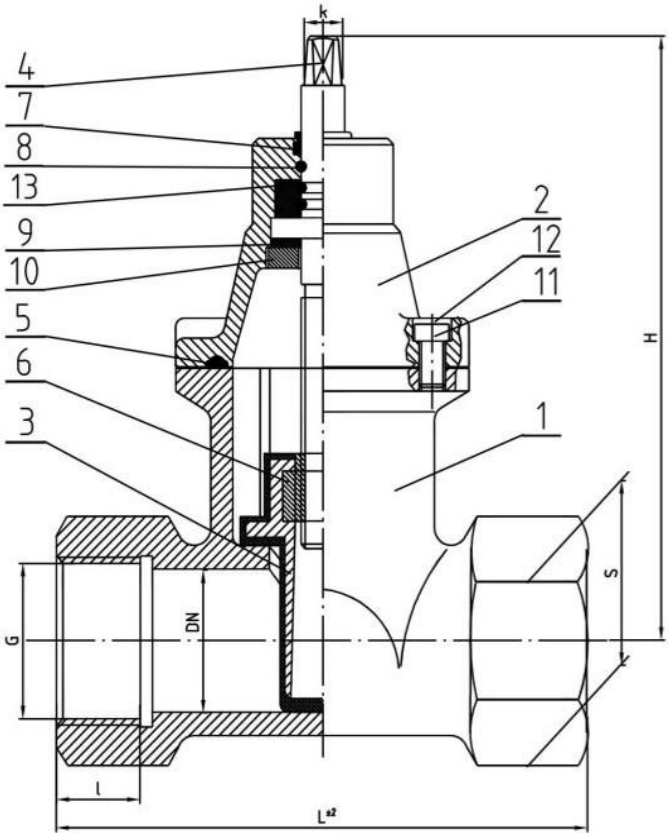

DN	H	G	L	1	S	k
40	225	1 ½"	165	25	60	16
50	235	2"	185	30	75	16

GATE VALVE WITH END ISO FOR PE PN 10/16

CAT. NO. ZS – 206

Application

Water installations with PE Pipes of drinking water, industrial systems transporting Rother chemically inert liquids

Design features

* **nominal diameter DN 32**
* **pipe PE diameter DN 40**
* **body and bonnet made of ductile cast iron GJS-500**
* **stem made of stainless steel with a rolled thread**
* **stem sealed with O-rings**
* **wedge made of cast iron, the entire surface coated with EPDM / NBR rubber**
* **straight – through flow**
* **tightness class A**
* **corrosion protection – powder paint RAL 5005**

Technical specifications, standards

* **length as show in the drawing**
* **nominal pressure PN 10/16**
* **temperature – max. 50°C**
* **standard PN-EN 1074-1:2**
* **all elements are corrosion protected with powder paint**
* **can be ordered with mounted ends for welding**

GATE VALVE WITH END ISO FOR PE PN 10/16

CAT. NO. ZS – 206

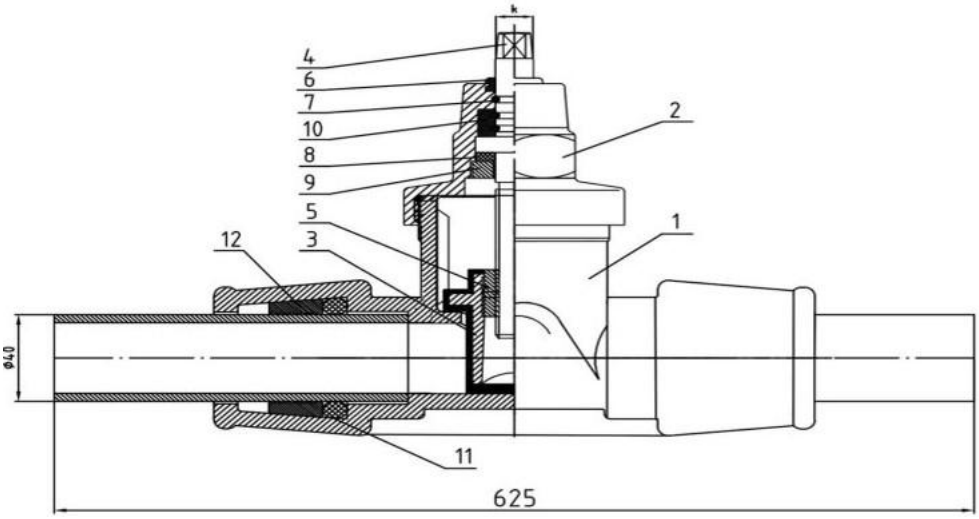

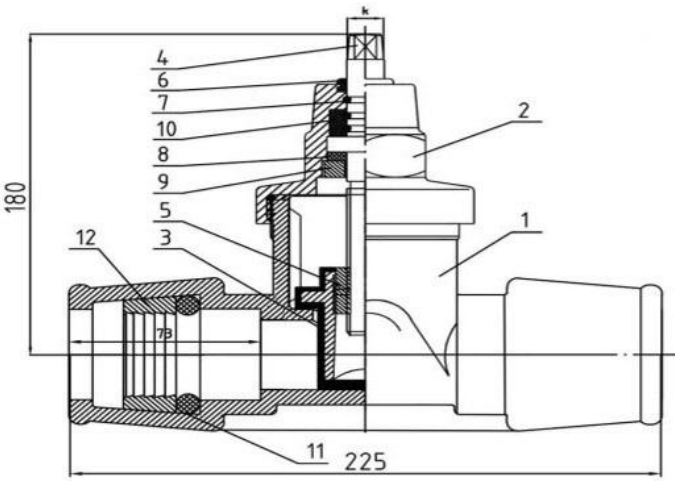

No.	Description	Pcs	Material	Standard
1	Body	1	EN-GJS-500	PN-EN 1563:2018-10
2	Cover	1	EN-GJS-500	PN-EN 1563:2018-10
3	Wedge, EPDM coated cast iron	1	EN-GJS-500 EPDM	PN-EN 1563:2018-10 PN-ISO 1629:2017-06
4	Spindle	1	X20CR13	PN-EN 10088-1:2014-12
5	Nut	1	MO 58	PN-EN 12164:2011
6	Protective seal	1	EPDM	PN-ISO 1629:2017-06
7	Sealing O-ring	4	EPDM	PN-ISO 1629:2017-06
8	Washer	1	Tarnamid	PN-EN ISO 17855-1:2014-12
9	Screw plug	1	MO 58	PN-EN 12164:2011
10	Sleeve	1	Tarnamid	PN-EN ISO 17855-1:2014-12
11	Sealing O-ring	2	NBR / EPDM	PN-ISO 1629:2017-06
12	Clamping sleeve	2	POM	PN-EN ISO 17855-1:2014-12

GLOBE CHECK VALVE fig. 287 PN 16

CAT NO. ZZ – 1400

Application

Intended for protecting pipelines against the backflow of the medium

Design features

* **diameter range DN 80 – DN 150**
* **flange fitting PN-EN 1092-2:1999**
* **body and cover – gray cast iron GJL-250**
* **rubber seal NBR – O-ring**
* **valve globe – stainless steel**
* **connection screws – galvanized steel**
* **valve seat – brass MO 58**
* **horizontal or vertical installation**
* **flow direction in accordance with marking on the body**

Technical specifications, standards

* **rated pressure PN 10/16**
* **temperature – max. 50°C**
* **anti-corrosive coating – powder paint**
* **high ingress protection**
* **easy installation and dismounting**
* **PZH certificate (Polish National Institute of Hygiene)**

GLOBE CHECK VALVE fig. 287 PN 16

CAT NO. ZZ – 1400

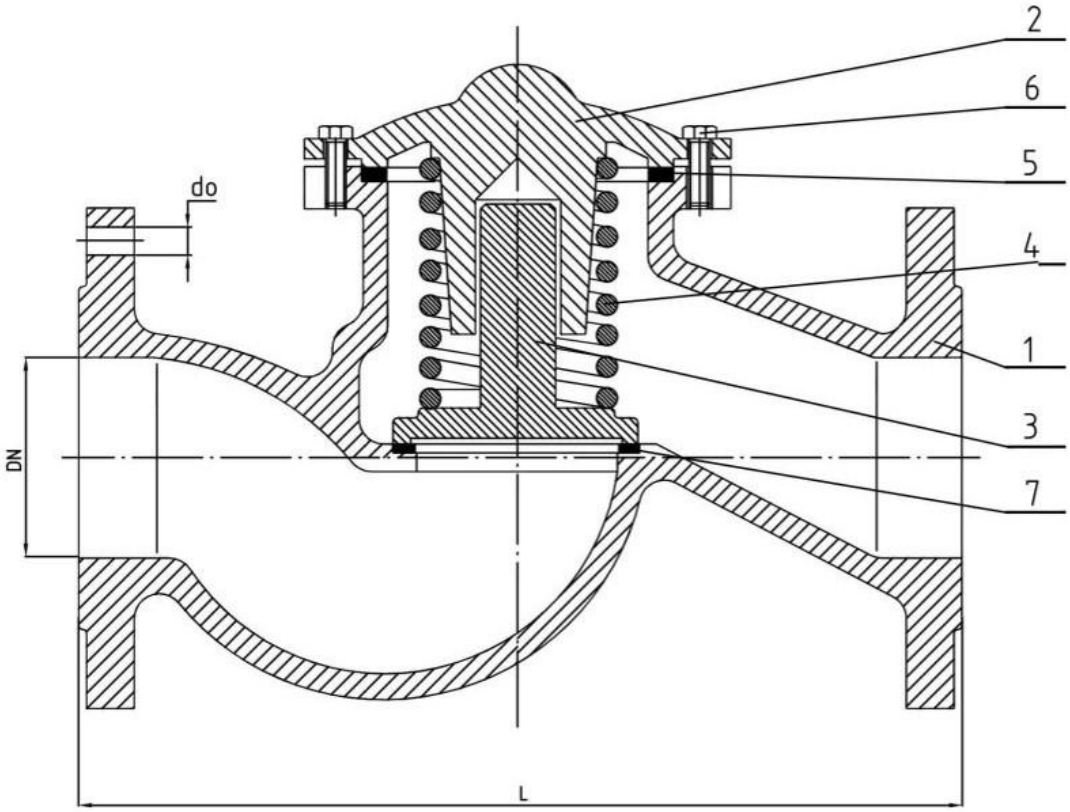

No.	Description	Pcs	Material	Standard
1	Body	1	EN-GJL-250	PN-EN 1561:2012
2	Cover	1	EN-GJL-250	PN-EN 1561:2012
3	Globe	1	X20CR13	PN-EN 10088-1:2014-12
4	Spring	1	B52	PN-EN 10089:2005
5	O-ring seal	1	NBR / EPDM	PN-ISO 1629:2018-10
6	Screw	4 / 8	S235	PN-EN ISO 4017:2011
7	Sealing ring	1	MO 58	PN-H 12163:2002

DN	L	do	holes	mass
80	310	19	8	21.0 kg
100	350	19	8	37.5 kg
150	480	23	8	60.0 kg

DOUBLE FLANGE SERVICE CONNECTOR WITH THE HYDRANT VALVE

CAT NO. C – 1200

Application

Water lines for sewage, industrial water or other fluids

Design features

* **diameter range DN 50 – DN 400**
* **body – gray cast iron GJL-250 or ductile cast iron GJS-500**
* **bolts – galvanized steel**

Technical specifications, standards

* **operating pressure PN 10/16**
* **temperature – max. 50°C**
* **scope: drinking water or non-aggressive liquids, not containing solids**
* **requirements connecting flanges according to PN-EN 1092-2:1999**
* **hydrant valve DN 50 AK11, with the cap 52**
* **secured powder**

DOUBLE FLANGE SERVICE CONNECTOR WITH THE HYDRANT VALVE

CAT NO. C – 1200

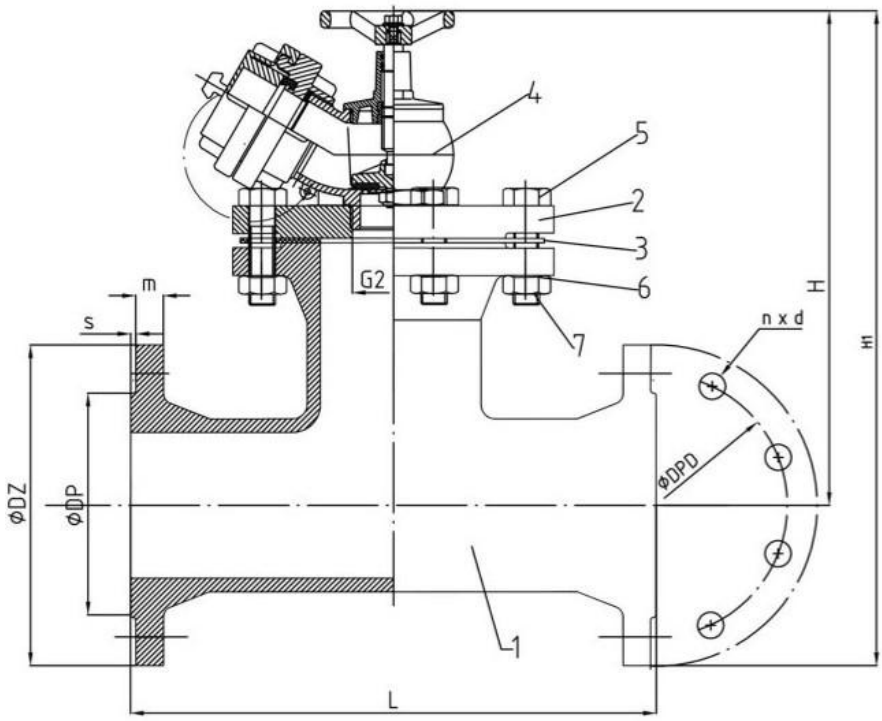

No.	Description	Pcs	Material	Standard
1	Body	1	EN-GJS-500 EN-GJL-250	PN-EN 1563:2018-10 PN-EN 1561:2012
2	Cover	1	EN-GJS-500 EN-GJL-250	PN-EN 1563:2018-10 PN-EN 1561:2012
3	Rubber	1	EPDM	PN-EN 681-2:2002
4	Hydrant valve	1	AK 11	PN-EN-671/1-2
5	Screw	8	galvanized	PN-EN ISO 4017:2011
6	Gasket	8	galvanized	PN-EN ISO 7091:2003
7	Nut	8	galvanized	PN-EN 4032:2013-06

DN	L	H	H1	DP	DZ	DPD	n x d	m	s
80	335	329	430	138	200	160	8 x 18	19	3
100	365	339	450	152	220	180	8 x 18	19	3
150	445	370	510	212	285	240	8 x 18	19	3
200	520	395	675	268	340	295	8 x 23	21	3
250	700	520	720	319	400	350	12 x 23	23	3
300	795	570	800	70	455	400	12 x 23	25	3
400	895	620	910	480	580	450	16 x 23	32	3

SPOTTERS FOR PVC/PE

CAT NO. N - 300

Application

Spotter is designed to perform a branch in a residential installation of main pipelines made from PVC/PE

Design features

* **diameter range DN 63 – DN 225**
* **body and band – gray cast iron GJL-250**
* **connection size 1 ¼″ – 2″**
* **stainless steel bolt**
* **stem sealing – O-rings**
* **scoring blade made entirely of brass**
* **screw – galvanized class 5.8**

Technical specifications, standards

* **nominal pressure PN 10**
* **temperature – max. 50°C**
* **anti-corrosive coating – powder paint RAL 5005 with a thickness of 200 microns**

Przedsiębiorstwo Inżynieryjno - Przemysłowe "WODROL" Wałcz Spółka z o.o.
Chełmińska street No. 6, 78-600 Wałcz, Poland
NIP (TAX ID) 765 10 71 186
(067) 258 32 91, (067) 250 07 78
handel@wodrol-walcz.pl, wodrol@wodrol-walcz.pl
www.wodrol-walcz.pl

SPOTTERS FOR PVC/PE

CAT NO. N – 300

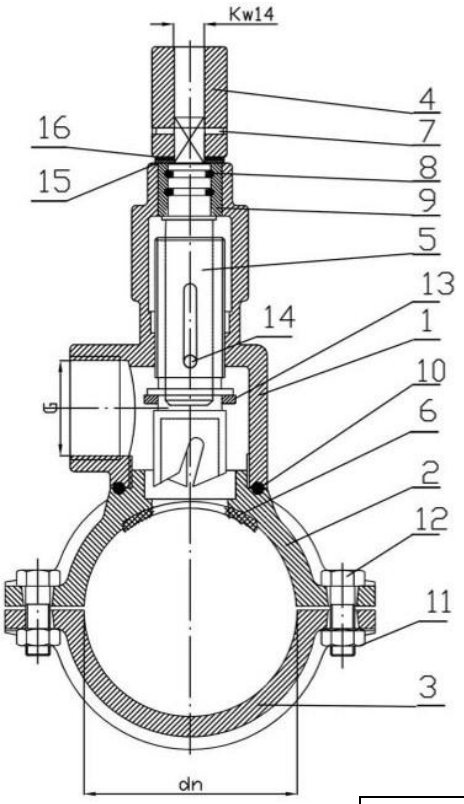

No.	Description	Pcs	Material	Standard
1	Body spotter	1	EN-GJL-250	PN-EN 1561:2012
2	Band upper	1	EN-GJL-250	PN-EN 1561:2012
3	Band lower	1	EN-GJL-250	PN-EN 1561:2012
4	Connector	1	EN-GJS-500	PN-EN 1563:2018-10
5	Scoring blade	1	MO 58	PN-EN 12164:2011
6	Protective rubber	1	NBR / EPDM	PN-ISO 1629:2017-06
7	Elastic pin	1	Steel	ISO 8752
8	Sealing ring O-ring	1	NBR / EPDM	PN-ISO 1629:2017-06
9	Sleeve	1	Tarnamid	PN-EN ISO 17855-1:2014-12
10	Sealing ring O-ring	2	NBR / EPDM	PN-ISO 1629:2017-06
11	Nut	2	Galvanized	DIN 934
12	Screw	2	Galvanized	DIN 933
13	Protective seal	1	NBR / EPDM	PN-ISO 1629:2017-06
14	Pin	1	Galvanized	ISO 8750
15	Steel gasket	1	Galvanized	PN-EN ISO 4762:2006
16	Gasket	1	Tarnamid	PN-EN ISO 17855-1:2014

G	dn
1 ¼	63
	75
	90
	110
	125
	160
	225
1 ½	63
	75
	90
	110
	125
	160
	225
2	63
	75
	90
	110
	125
	160
	225

CONNECTION SET NWZ FOR PVC/PE

CAT NO. N – 301

Application

Spotter is designed to perform the installation of domestic branch of the main pipe made from PVC/PE carrying water for human consumption

Design features

* **diameter range DN 63 – DN 315**
* **body and band – ductile cast iron GJS-500**
* **connection size 1 ¼″ – 2″**
* **stainless spindle with rolled thread**
* **stem sealing – O-rings**
* **simple flight gate**
* **drilling under pressure using a devices for drilling**
* **clamp foot and entirely lined with rubber lining**
* **screw – galvanized class 5.8**
* **anti-corrosive coating – powder paint RAL 5005 with a thickness of 200 microns**

Technical specifications, standards

* **nominal pressure PN 10**
* **temperature – max. 50°C**
* **requirements and tests acc. PN-EN 1074-1:2**

CONNECTION SET NWZ FOR PVC/PE

CAT NO. N – 301

No.	Description	Pcs	Material	Standard
1	Body	1	EN-GJS-500	PN-EN 1563:2018-10
2	Cover	1	EN-GJS-500	PN-EN 1563:2018-10
3	Wedge, NBR or EPDM coated cast iron	1	EN-GJS-500 NBR / EPDM	PN-EN 1563:2018-10 PN-ISO 1629:2017-06
4	Spindle	1	X20G13	PN-EN 10088-1:2014-12
5	Cover rubber	1	NBR / EPDM	PN-ISO 1629:2017-06
6	Nut	1	MO 58	PN-EN 12164:2011
7	Covering seal	1	NBR	PN-ISO 1629:2017-06
8	Sealing ring O-ring	3	NBR / EPDM	PN-ISO 1629:2017-06
9	Gasket	1	Tarnamid	PN-EN ISO 17855-1:2014
10	Plug	1	MO 58	PN-EN 12164:2011
11	Screw	4	Galvanized	PN-EN ISO 4762:2006
12	Cap	4	PVC	PN-EN 12351:2010
13	Sleeve	1	Tarnamid	PN-EN ISO 17855-1:2014
14	Plug galvanized	1	S235	PN-EN 10224:2006
15	Sealing ring O-ring	1	NBR / EPDM	PN-ISO 1629:2017-06
16	Clamp upper	1	EN-GJS-500	PN-EN 1563:2018-10
17	Clamp upper rubber	1	NBR / EPDM	PN-ISO 1629:2017-06
18	Clamp lower	1	EN-GJS-500	PN-EN 1563:2018-10
19	Clamp lower rubber	1	NBR / EPDM	PN-ISO 1629:2017-06
20	Screw	4	Galvanized	DIN 933
21	Nut	4	Galvanized	DIN 934

NWZ with valve DN 40 and DN 50

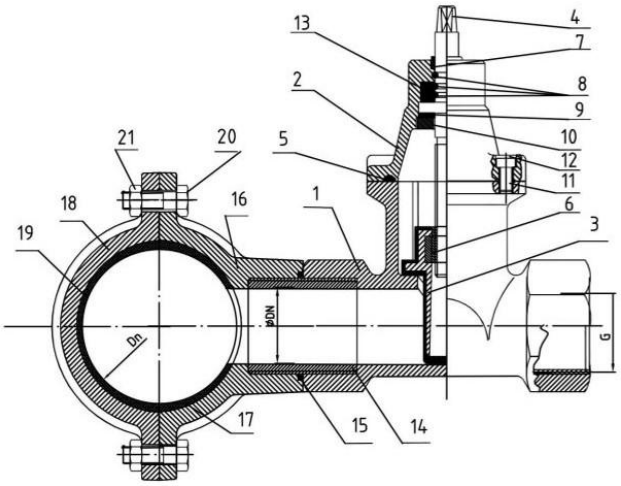

NWZ with valve DN 32

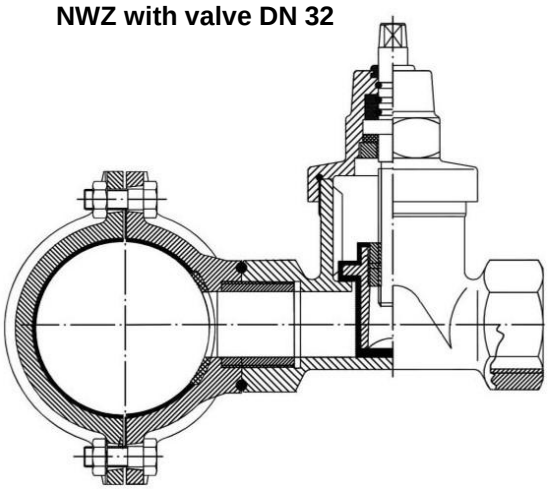

DN	Valve DN 32, DN 40, DN 50
63	G 1 ¼
90	
110	
125	
140	
160	G 1 ½
200	G 2
225	
250	
280	
315	

CONNECTION SET NWZ WITH STEEL SADDLE

CAT NO. N – 303

Application

Spotter is designed to perform the installation of domestic branch of the main pipe made of steel or cast iron pipes conveying water for human consumption

Design features

* **diameter range DN 80 – DN 300**
* **body and band – ductile cast iron GJS-500**
* **connection size 1 ¼″ – 2″**
* **stainless spindle with rolled thread**
* **stem sealing – O-rings**
* **simple flight gate**
* **drilling under pressure using a devices for drilling**
* **rubber seal EPDM or NBR**
* **screw – stainless steel A2**
* **band assembly – stainless steel X20G13**
* **anti-corrosive coating – powder paint RAL 5005 with a thickness of 200 microns**

Technical specifications, standards

* **nominal pressure PN 10/16**
* **temperature – max. 50°C**
* **requirements and tests acc. PN-EN 1074-1:2**

CONNECTION SET NWZ WITH STEEL SADDLE

CAT NO. N – 303

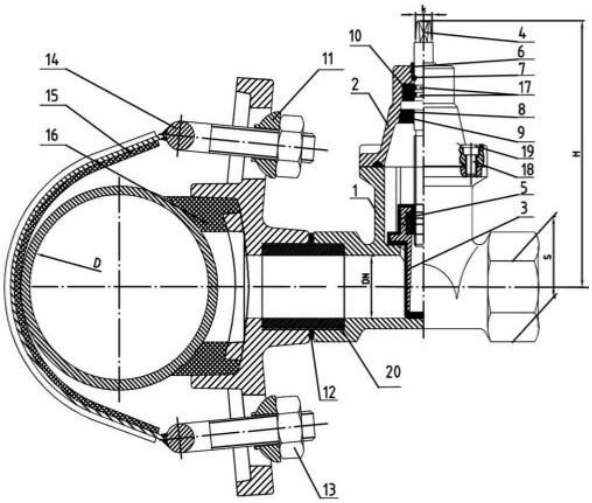

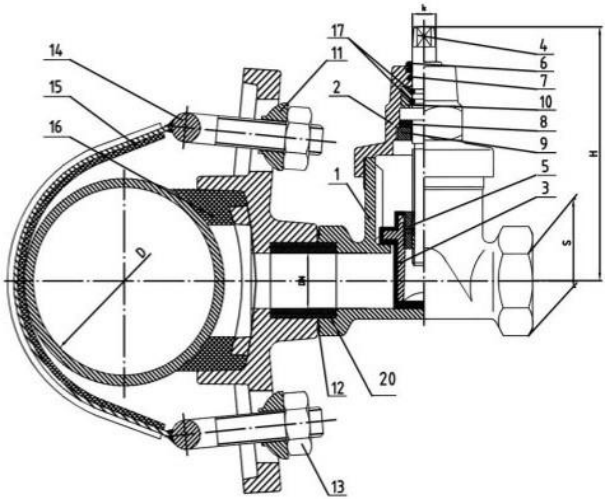

No.	Description	Pcs	Material	Standard
1	Body	1	EN-GJS-500 EN-GJL-250	PN-EN 1563:2018-10 PN-EN 1561:2012
2	Cover	1	EN-GJS-500 EN-GJL-250	PN-EN 1563:2018-10 PN-EN 1561:2012
3	Wedge, NBR or EPDM coated cast iron	1	EN-GJS-500 EN-GJL-250 NBR / EPDM	PN-EN 1561:2012 PN-EN 1563:2018-10 PN-ISO 1629:2017-06
4	Spindle	1	X20CR13	PN-EN 10088-1:2014-12
5	Nut	1	MO 58	PN-EN 12164:2011
6	Covering seal	1	NBR	PN-ISO 1629:2017-06
7	Sealing ring O-ring	1	NBR / EPDM	PN-ISO 1629:2017-06
8	Washer	1	Tarnamid	PN-EN ISO 17855-1:2014-12
9	Plug	1	MO 58	PN-EN 12164:2011
10	Sleeve	1	Tarnamid	PN-EN ISO 17855-1:2014-12
11	Washer	2	S23S	PN-EN 10025:2007
12	Sealing ring O-ring	1	NBR / EPDM	PN-ISO 1629:2017-06
13	Nut	2		PN-EN 4032:2013-06
14	Clamp	1	X20G13	PN-EN 10028-1:2017-09
15	Rubber band foot	1	NBR / EPDM	PN-ISO 1629:2017-06
16	Rubber	1	EPDM	PN-ISO 1629:2017-06
17	Sealing ring O-ring	2	NBR / EPDM	PN-ISO 1629:2017-06
18	Screw	4	Galvanized	PN-EN ISO 4762:2006
19	Cap	4	PVC	PN-EN 12351:2010
20	Plug	1	S235	PN-EN 10025:2007

DN	D	H	k	S
32	80	155	124	56
	100			
	150			
	200			
	250			
	300			
DN	D	H	K	S
40	80	215	13.4	60
	100			
	150			
	200			
	250			
	300			
DN	D	H	k	S
50	80	235	13.4	75
	100			
	150			
	200			
	250			
	300			

Przedsiębiorstwo Inżynieryjno - Przemysłowe "WODROL" Wałcz Spółka z o.o.
Chełmińska street No. 6, 78-600 Wałcz, Poland
NIP (TAX ID) 765 10 71 186
(067) 258 32 91, (067) 250 07 78
handel@wodrol-walcz.pl, wodrol@wodrol-walcz.pl
www.wodrol-walcz.pl

FLANGED PIPE SADDLE

CAT NO.– 400

Application

For making connections with flange DN 50 pipe steel or cast iron in water supply systems, sewage and industrial transporting other liquids chemically inert temp. 50°C

Design features

* **diameter range DN 80 – DN 300**
* **body – ductile cast iron GJS-500**
* **seal EPDM (potable water) or NBR (sewage)**
* **bolts – galvanized steel (stainless steel available)**
* **departure flange DN 50**
* **band assembly – stainless steel**

Technical specifications, standards

* **nominal pressure PN 10/16**
* **temperature – max. 50°C**
* **anti-corrosive coating**
* **flanged acc. PN-EN 1092-2:1999**

FLANGED PIPE SADDLE

CAT NO.– 400

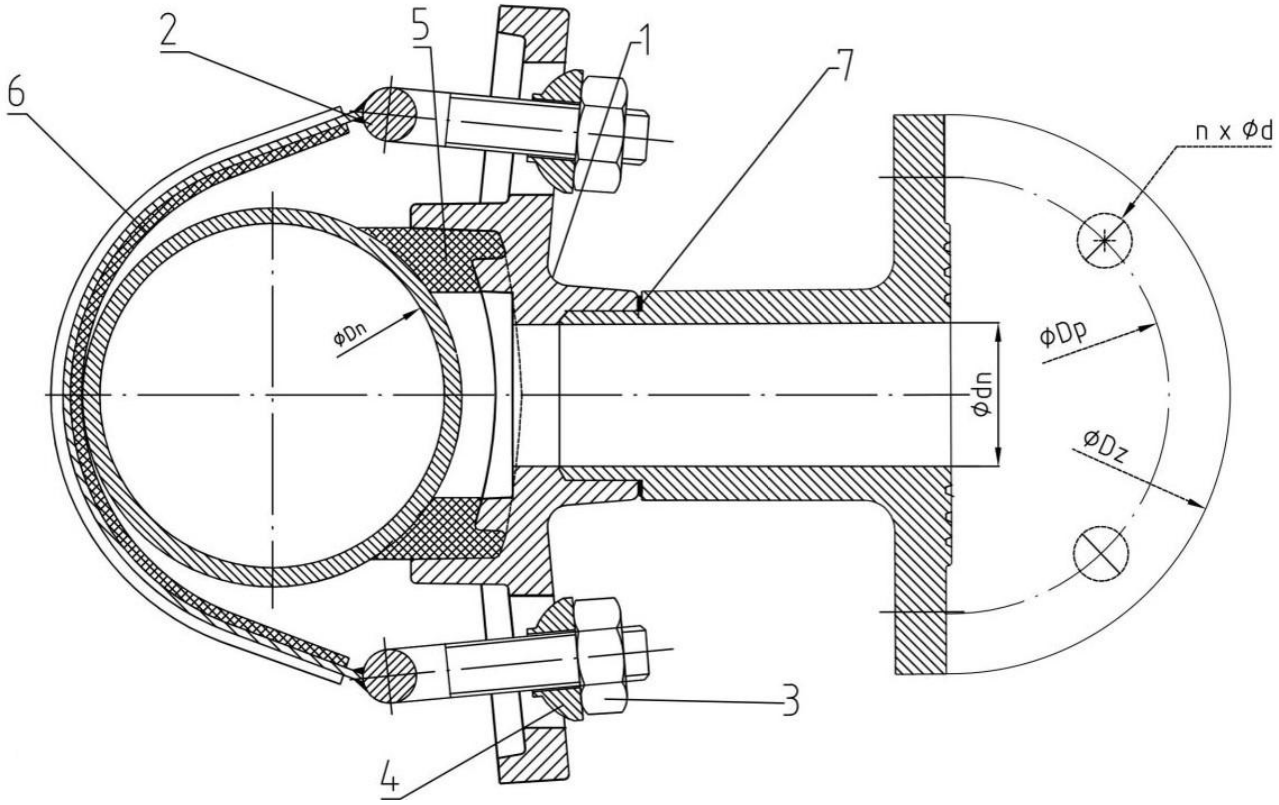

No.	Description	Pcs	Material	Standard
1	Foot	1	EN-GJS-500	PN-EN 1563:2018-10
2	Clamp	1	X20G13	PN-EN 10088-1:2014-12
3	Nut	1	Galvanized	PN-EN ISO 4032:2013
4	Washer	2	Galvanized	DIN 6319C
5	Sealing foot	2	NBR / EPDM	PN-ISO 1629:2017-06
6	Rubber band clamps	1	NBR	PN-ISO 1629:2017-06
7	Sealing O-ring	1	NBR / EPDM	PN-ISO 1629:2017-06
8	FW stub pipe	1	EN-GJS-500	PN-EN 1563:2018-10

DN	dn	Dz	Dp	n x d
80	50	165	125	4 x 18
100	50	165	125	4 x 18
125	50	165	125	4 x 18
150	50	165	125	4 x 18
200	50	165	125	4 x 18
250	50	165	125	4 x 18
300	50	165	125	4 x 18

FLANGED PIPE SADDLE FOR PVC/PE

CAT NO.– 401

Application

For making connections with flange DN 50 to DN 100 pipe PVC/PE in water supply systems, sewage and industrial transporting other liquids chemically inert temp. 50°C

Design features

* **departure flange DN 50 – DN 100**
* **diameter range DN 63 – DN 315**
* **body – ductile cast iron GJS-500**
* **seal EPDM (potable water) or NBR (sewage)**
* **bolts – galvanized steel**

Technical specifications, standards

* **nominal pressure PN 10/16**
* **temperature – max. 50°C**
* **anti-corrosive coating**
* **flanged acc. PN-EN 1092-2:1999**

FLANGED PIPE SADDLE FOR PVC/PE

CAT NO.– 401

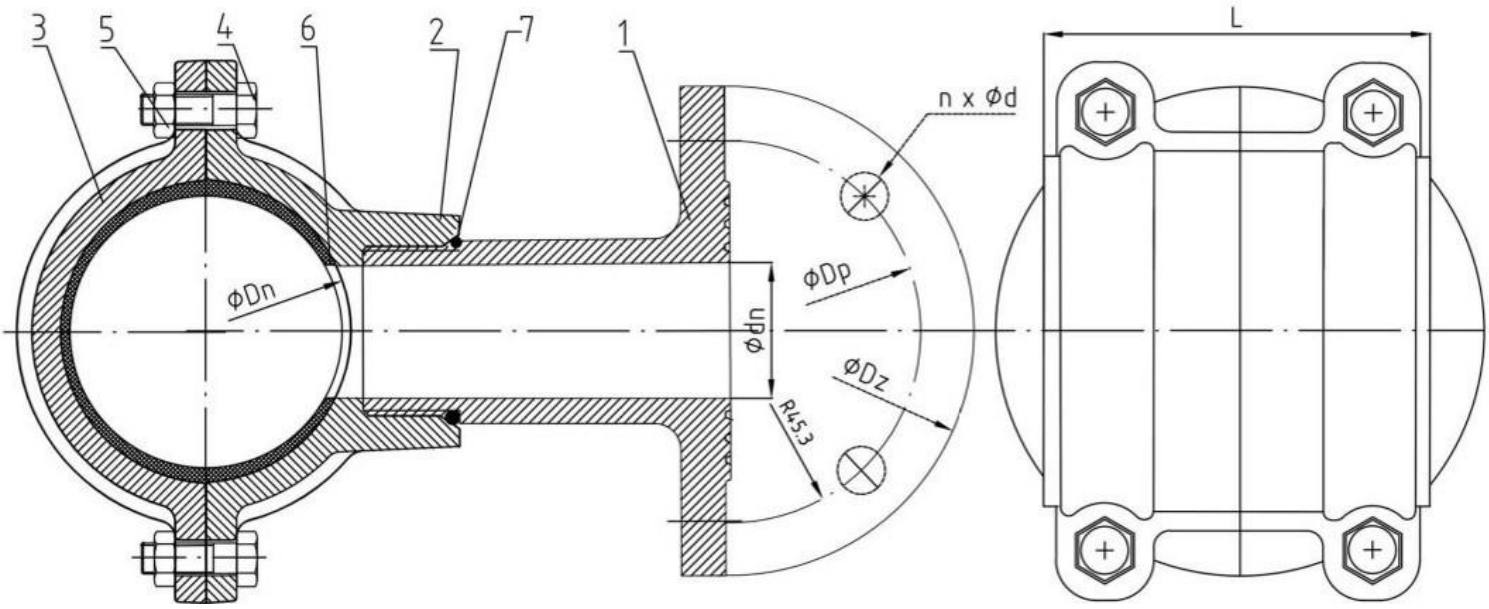

No.	Description	Pcs	Material	Standard
1	Stub pipe FW	1	EN-GJS-500	PN-EN 1563:2018-10
2	Clamp lower	1	EN-GJS-500	PN-EN 1563:2018-10
3	Clamp upper	1	EN-GJS-500	PN-EN 1563:2018-10
4	Screw	4	Galvanized	PN-EN ISO 4017:2014-09
5	Nut	4	Galvanized	PN-EN ISO 4032:2013
6	Rubber band clamps	1	NBR / EPDM	PN-ISO 1629:2017-06
7	Sealing O-ring	1	EPDM	PN-ISO 1629:2017-06

DN	dn	Dz	Dp	n x d	L
63	50	165	125	4 x 18	110
90	50	165	125	4 x 18	120
110	50	165	125	4 x 18	120
110	80	200	160	8 x 18	120
125	50	165	125	4 x 18	120
160	50	165	125	4 x 18	150
160	80	200	160	8 x 18	150
160	100	220	180	8 x 18	150
225	50	165	125	4 x 18	180
225	80	200	160	8 x 18	180
250	50	165	125	4 x 18	180
250	80	200	160	8 x 18	180
250	100	220	180	8 x 18	180
315	100	220	180	8 x 18	180

FLANGED PIPE SADDLE

CAT NO.– 402

Application

For making connections pipe steel or cast iron in water supply systems, sewage and industrial transporting other liquids chemically inert temp. 50°C

Design features

* **diameter range DN 80 – DN 300**
* **body – ductile cast iron GJS-500**
* **seal EPDM (potable water) or NBR (sewage)**
* **bolts – stainless steel**
* **departure thread 2″**

Technical specifications, standards

* **nominal pressure PN 10/16**
* **temperature – max. 50°C**
* **anti-corrosive coating**
* **threaded connection acc. PN-EN ISO 228-1:2005**

FLANGED PIPE SADDLE

CAT NO.– 402

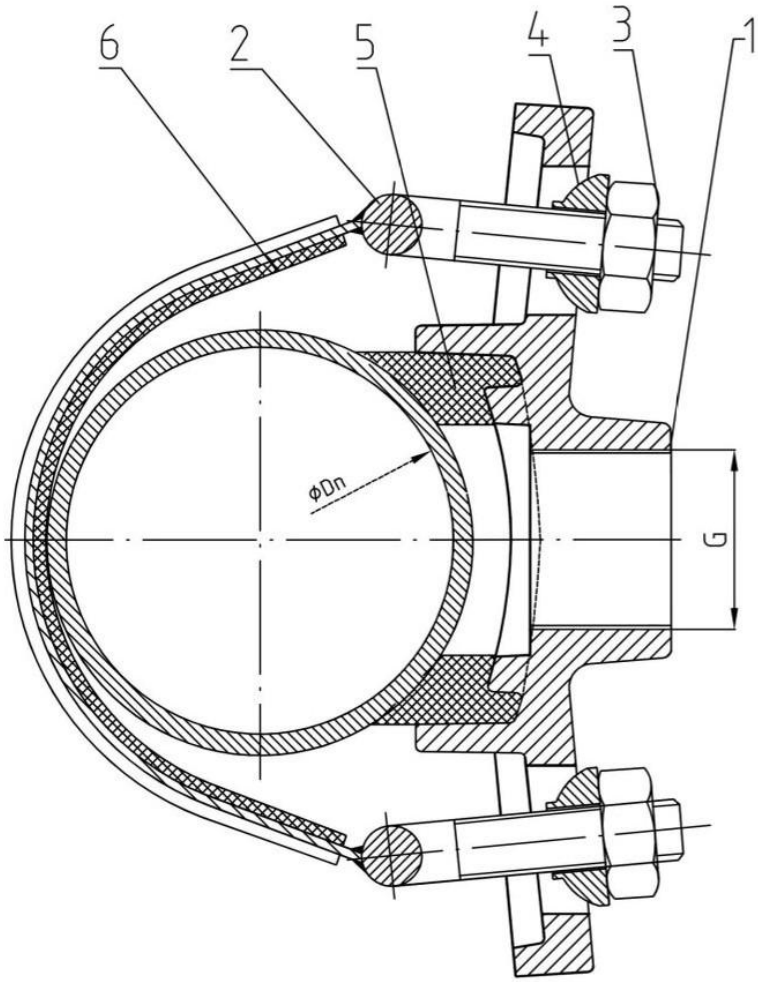

No.	Description	Pcs	Material	Standard
1	Foot	1	EN-GJS-500	PN-EN 1563:2018-10
2	Clamp	1	X20G13	PN-EN 10088-1:2014-12
3	Nut	2	Galvanized	PN-EN ISO 4032:2013
4	Washer	2	Galvanized	DIN 6319C
5	Sealing foot	1	NBR / EPDM	PN-ISO 1629:2017-06
6	Rubber band clamp	1	NBR	PN-ISO 1629:2017-06

DN	G	G	G
80	1 ¼″	1 ½″	2″
100	1 ¼″	1 ½″	2″
150	1 ¼″	1 ½″	2″
200	1 ¼″	1 ½″	2″
250	1 ¼″	1 ½″	2″
300	1 ¼″	1 ½″	2″

PIPE CONNECTOR

CAT NO. ŁR – 900

Application

Used for connecting bare ends cast iron and steel pipe in water supply systems

Design features

* **diameter range DN 80 – DN 200**
* **body and cover – ductile cast iron GJS-500**
* **seal EPDM (potable water) or NBR (sewage)**
* **bolts – galvanized steel (stainless steel available)**
* **large high of the connector and shape of the body for easy installation**

Technical specifications, standards

* **nominal pressure PN 10**
* **temperature – max. 50°C**
* **anti-corrosive coating – powder paint**

PIPE CONNECTOR

CAT NO. ŁR – 900

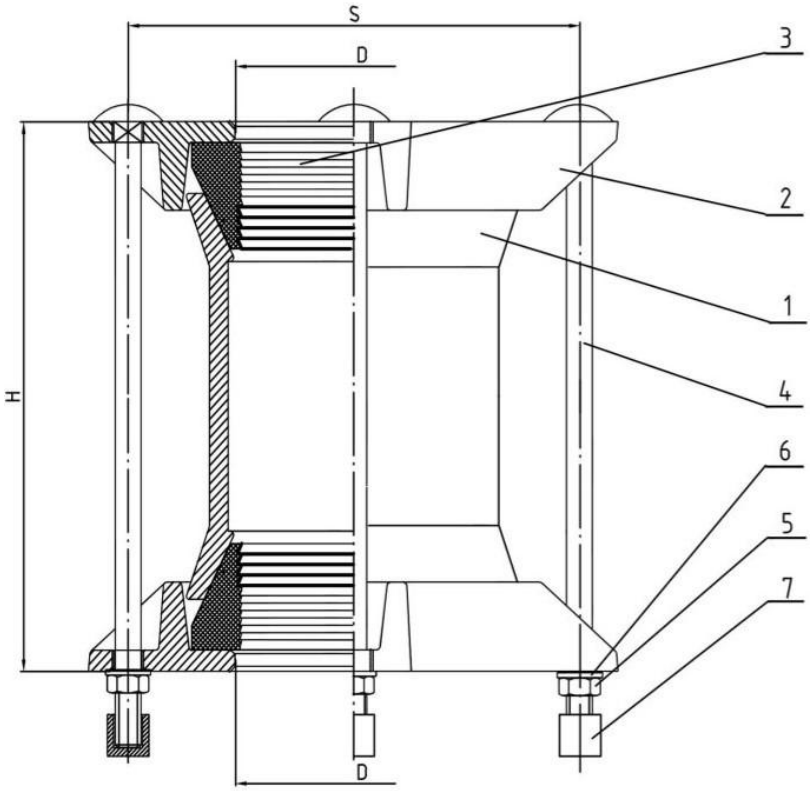

No.	Description	Pcs	Material	Standard
1	Body	1	EN-GJS-500	PN-EN 1563:2018-10
2	Ring	2	EN-GJS-500	PN-EN 1563:2018-10
3	Seal	2	EPDM	PN-ISO 1629:2017-06
4	Bolt	4	PN 82406	DIN 603
5	Nut M10	4	PN 82144	DIN 934
6	Washer	4	St3S	PN-EN ISO 7091:2003
7	Casing	4	PVC	PN-EN 12351:2010

DN	H	D	S	Dimension
80	220	101	180	84 – 104
100	220	124	204	108 – 131
150	330	187	264	159 – 184
200	330	243	316	219 - 234

FLANGE PIPE CONNECTOR

CAT NO. ŁR – 901

Application

Used for connecting bare ends cast iron and steel pipe fittings flange in water supply systems

Design features

* **diameter range DN 80 – DN 200**
* **body and cover – ductile cast iron GJS-500**
* **seal EPDM (potable water) or NBR (sewage)**
* **bolts – galvanized steel (stainless steel available)**
* **large high of the connector and shape of the body for easy installation**

Technical specifications, standards

* **nominal pressure PN 10**
* **temperature – max. 50°C**
* **flanges acc. PN-EN 1092-2:1999**
* **anti-corrosive coating – powder paint**

FLANGE PIPE CONNECTOR

CAT NO. ŁR – 901

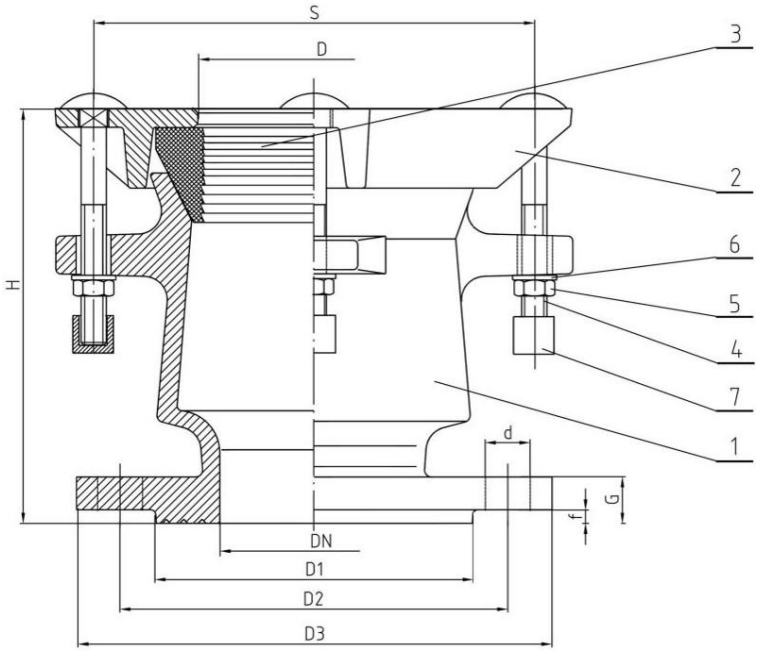

No.	Description	Pcs	Material	Standard
1	Body	1	EN-GJS-500	PN-EN 1563:2018-10
2	Ring	1	EN-GJS-500	PN-EN 1563:2018-10
3	Seal	1	EPDM	PN-ISO 1629:2017-06
4	Bolt	4	PN 82406	DIN 603
5	Nut M10	4	PN 82144	DIN 934
6	Washer	4	St3S	PN-EN ISO 7091:2003
7	Casing	4	PVC	PN-EN 12351:2010

DN	D	D1	D2	D3	S	f	G	H	d	hole	Dimension
80	104	137	160	200	180	5	20	180	19	8	84 – 104
100	132	158	180	220	204	5	22	190	19	8	108 – 131
150 / 125	158	212	240	285	230	5	23	190	23	8	133 – 153
150	185	212	240	285	264	5	23	190	23	8	159 – 184
200	238	268	295	340	316	5	23	220	23	8	219 – 234

PIPE CONNECTOR FOR PVC/PE

CAT NO. ŁR – 902

Application

Used for connecting bare ends PVC and PE pipe in water supply systems

Design features

* **diameter range DN 80 – DN 200**
* **body and cover – ductile cast iron GJS-500**
* **seal EPDM (potable water) or NBR (sewage)**
* **bolts – galvanized steel (stainless steel available)**
* **large high of the connector and shape of the body for easy installation**
* **special brass clamping ring vulcanized in the seal prevents slipping out of the pipe**

Technical specifications, standards

* **nominal preassure PN 10**
* **temperature – max. 50°C**
* **anti – corossive coating**

Przedsiębiorstwo Inżynieryjno - Przemysłowe "WODROL" Wałcz Spółka z o.o.
Chełmińska street No. 6, 78-600 Wałcz, Poland
NIP (TAX ID) 765 10 71 186
(067) 258 32 91, (067) 250 07 78
handel@wodrol-walcz.pl, wodrol@wodrol-walcz.pl
www.wodrol-walcz.pl

PIPE CONNECTOR FOR PVC/PE

CAT NO. ŁR – 902

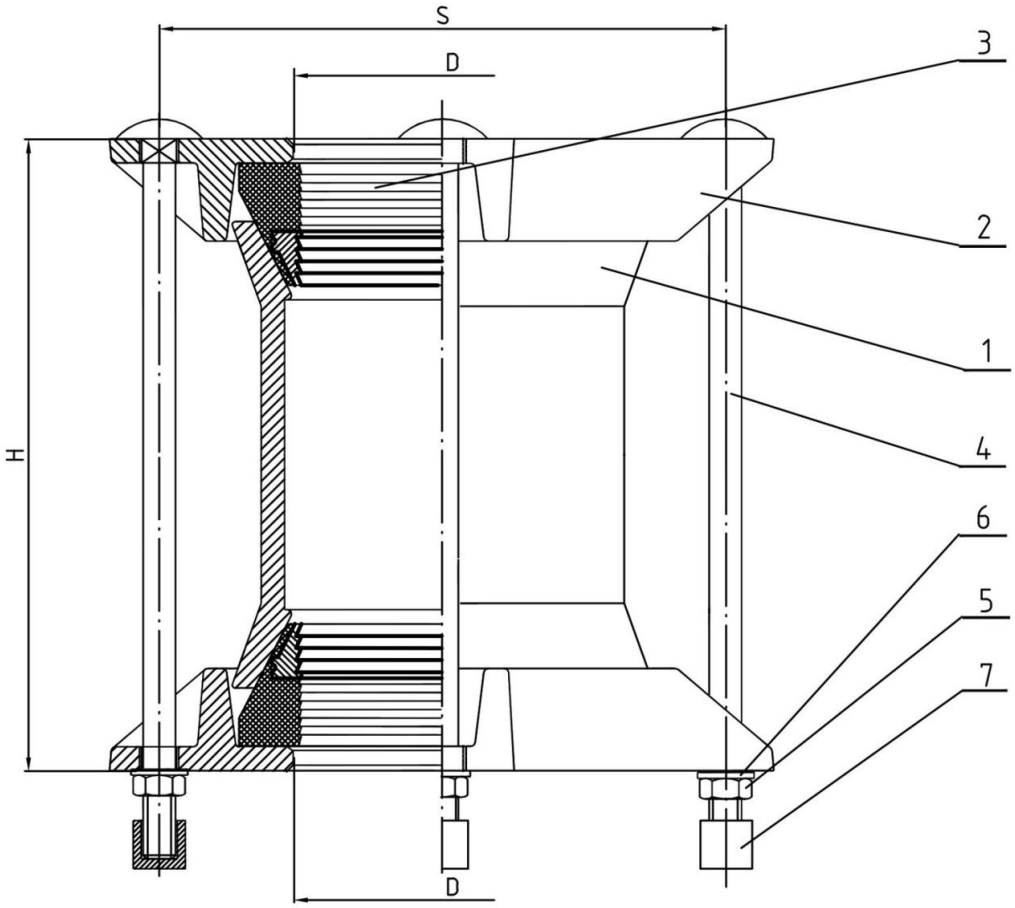

No.	Description	Pcs	Material	Standard
1	Body	1	EN-GJS-500	PN-EN 1563:2018-10
2	Ring	1	EN-GJS-500	PN-EN 1563:2018-10
3	Seal with brass ring	2	EPDM / MO 58	PN-ISO 1629:2017-06 PN-EN 12164:2011
4	Bolt	4	PN 82406	DIN 603
5	Nut M10	4	PN 82144	DIN 934
6	Washer	4	St3S	PN-EN ISO 7091:2003
7	Casing	4	PVC	PN-EN 12351:2010

DN	H	D	S
80	220	101	180
100	220	124	204
150	320	185	264
200	320	226	356

FLANGE PIPE CONNECTOR FOR PVC/PE

CAT NO. ŁR – 903

Application

Used for connecting bare ends PVC and PE pipe fittings flange in water supply systems

Design features

* **diameter range DN 80 – DN 200**
* **body and cover – ductile cast iron GJS-500**
* **seal EPDM (potable water) or NBR (sewage)**
* **bolts – galvanized steel (stainless steel available)**
* **large high of the connector and shape of the body for easy installation**
* **special brass clamping ring vulcanized in the seal prevents slipping out of the pipe**

Technical specifications, standards

* **nominal preassure PN 10**
* **temperature – max. 50°C**
* **flanges acc. PN-EN 1092-2:1999**
* **anti – corossive coating**

FLANGE PIPE CONNECTOR FOR PVC/PE

CAT NO. ŁR – 903

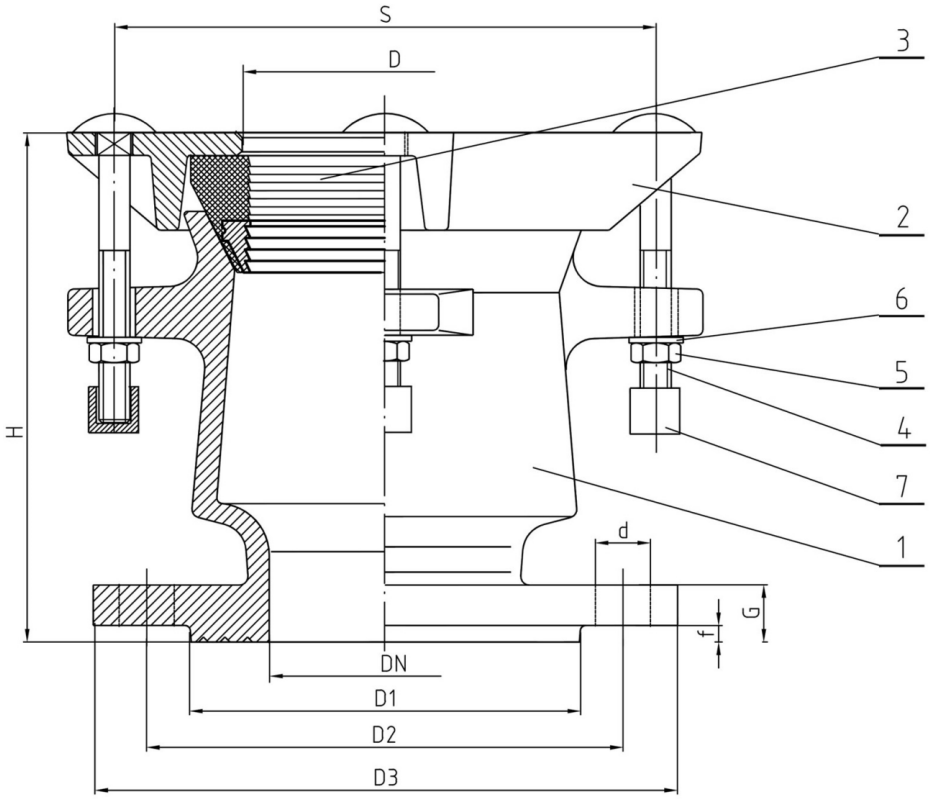

No.	Description	Pcs	Material	Standard
1	Body	1	EN-GJS-500	PN-EN 1563:2018-10
2	Ring	1	EN-GJS-500	PN-EN 1563:2018-10
3	Seal with brass ring	2	EPDM / MO 58	PN-ISO 1629:2017-06 PN-EN 12164:2011
4	Bolt	4	PN 82406	DIN 603
5	Nut M10	4	PN 82144	DIN 934
6	Washer	4	St3S	PN-EN ISO 7091:2003
7	Casing	4	PVC	PN-EN 12351:2010

DN	D	D1	D2	D3	S	f	G	H	d	Holes
80	101	137	160	200	180	5	20	185	19	8
100	124	158	180	220	204	5	22	195	19	8
150	185	212	240	285	264	7	22	264	19	8
200	226	268	295	340	356	7	22	225	19	8

EXPANSION JOINT

CAT NO. ŁR – 904

Application

Adjustment of the pipeline length and allecation of the piping stress, compensation for movement ± 30 mm in plumbing (potable water, sewage), industrial pipelines, other liquids chemically neutral

Design features

* **diameter range DN 80 – DN 150**
* **body – ductile cast iron GJS-500**
* **seal EPDM (potable water) or NBR (sewage)**
* **bolts – galvanized steel**

Technical specifications, standards

* **nominal pressure PN 10/16**
* **temperature – max. 50°C**
* **flanges acc. PN-EN 1092-2:1999**
* **anti-corrosive coating**

EXPANSION JOINT

CAT NO. ŁR – 904

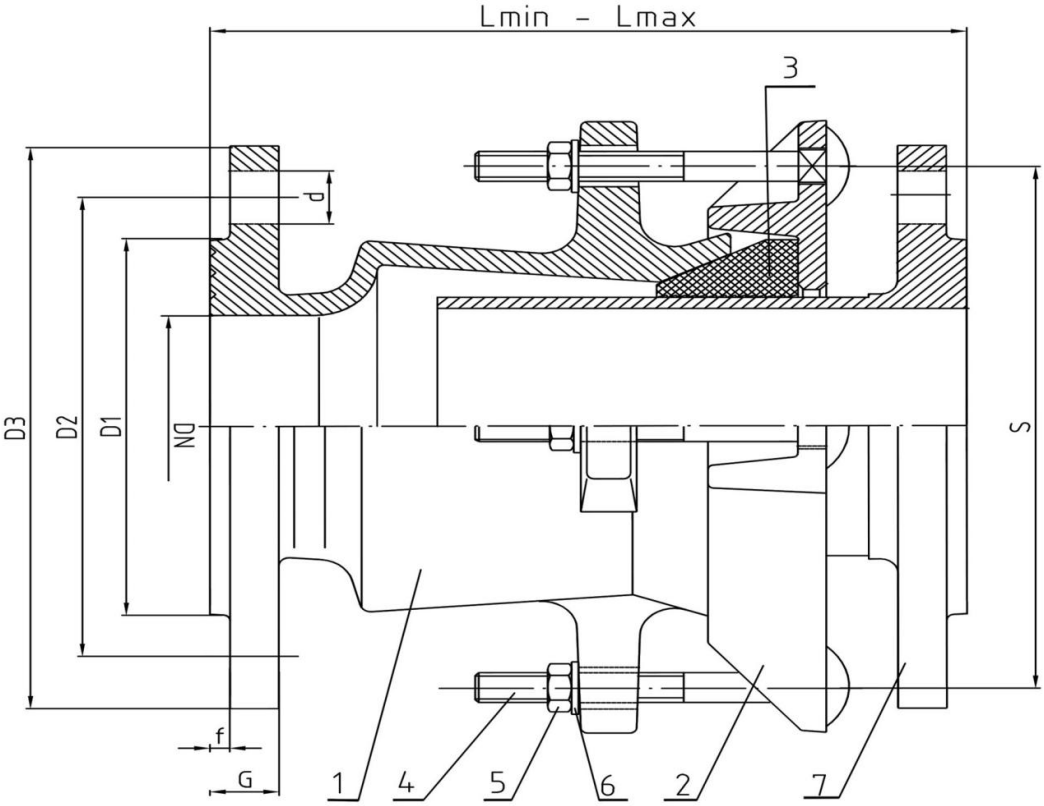

No.	Description	Pcs	Material	Standard
1	Body	1	EN-GJS-500	PN-EN 1563:2018-10
2	Ring	1	EN-GJS-500	PN-EN 1563:2018-10
3	Seal	1	EPDM	PN-ISO 1629:2017-06
4	Bolt	4	Galvanized	DIN 6319C
5	Nut M10	4	Galvanized	DIN 6319C
6	Washer	4	Galvanized	PN-EN ISO 7091:2003
7	Stub pipe	1	EN-GJS-500	PN-EN 1563:2018-10

DN	D	D1	D2	D3	S	F	G	dxll	d	L min	L max
80	104	137	160	200	180	3	20	8	19	220	280
100	132	158	180	220	204	3	22	8	19	225	285
150	185	212	240	285	264	3	23	8	23	225	285

DISMANTLING JOINT

CAT NO. ŁR – 905

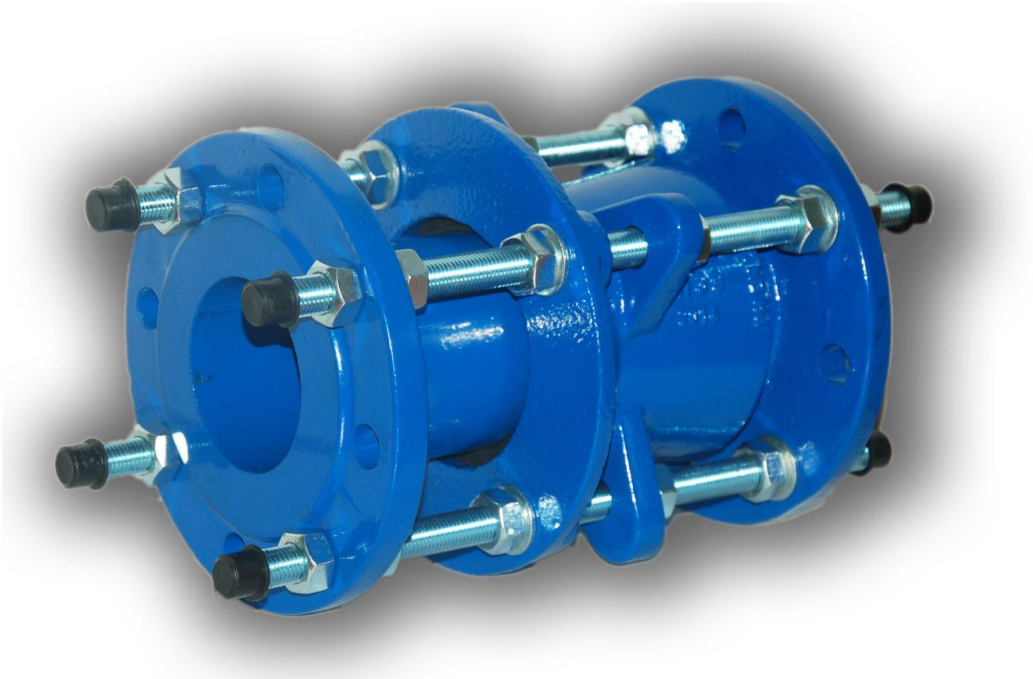

Application

Adjustment of the pipeline length and allocation of the piping stress, compensation for movement ± 30 mm in plumbing (potable water, sewage), industrial pipelines, other liquids chemically neutral

Design features

* **diameter range DN 80 – DN 150**
* **body – ductile cast iron GJS-500**
* **seal EPDM (potable water) or NBR (sewage)**
* **bolts – galvanized steel**
* **threaded distance pins – galvanized cl. 8.8, optionally stainless steel A2**
* **adjustment range ji ± 30 mm**

Technical specifications, standards

* **nominal pressure PN 10/16**
* **temperature – max. 50°C**
* **flanges acc. PN-EN 1092-2:1999**
* **anti-corrosive coating**

DISMANTLING JOINT

CAT NO. ŁR – 905

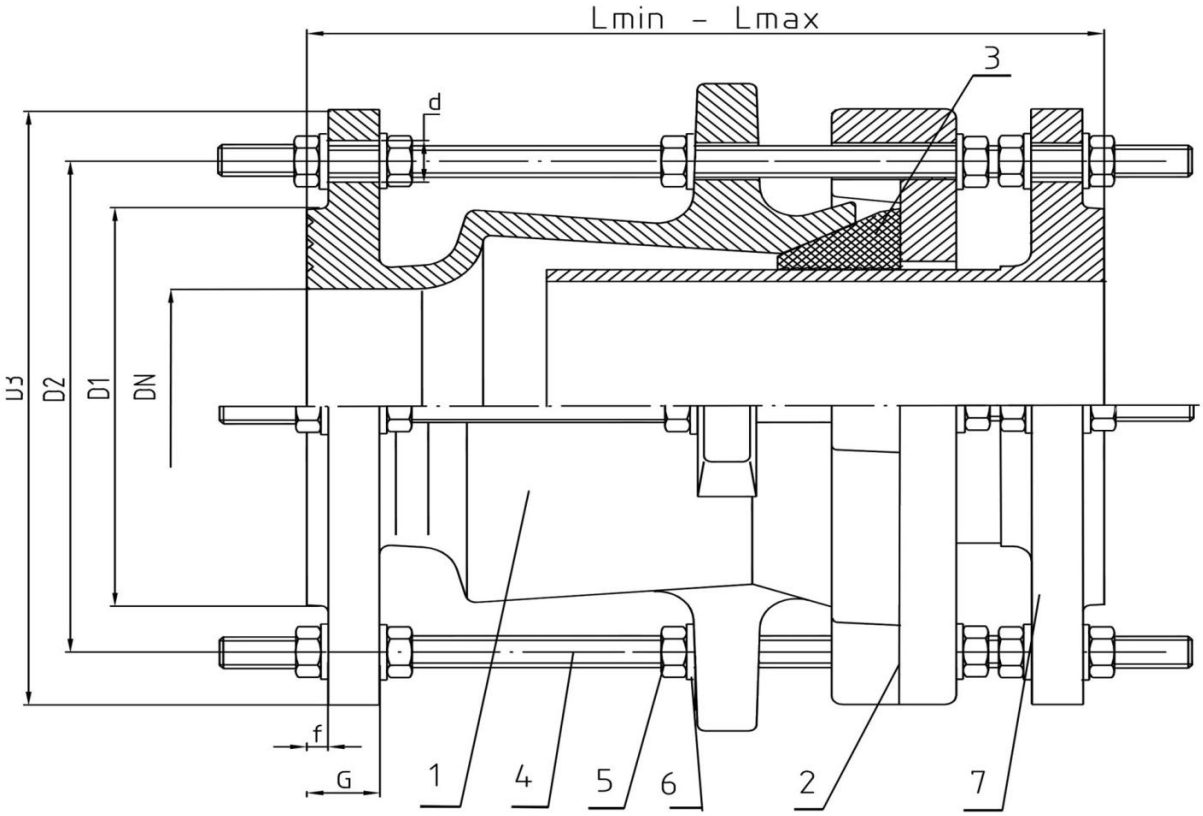

No.	Description	Pcs	Material	Standard
1	Body	1	EN-GJS-500	PN-EN 1563:2018-10
2	Ring	1	EN-GJS-500	PN-EN 1563:2018-10
3	Seal	1	EPDM / NBR	PN-ISO 1629:2017-06
4	Bolt	4	Fe / Zn5 / A2	DIN 976
5	Nut M10	24	Fe / Zn5 / A2	DIN 934
6	Washer	24	Fe / Zn5	PN-EN ISO 7091:2003
7	Stub pipe	1	EN-GJS-500	PN-EN 1563:2018-10

DN	D1	D2	D3	S	f	G	dxll	d	L min	L max
80	137	160	200	180	3	20	8	19	220	280
100	158	180	220	204	3	22	8	19	225	285
150	212	240	285	264	3	23	8	23	225	285

BALL VENT FIG. 918

CAT NO. OD – 1300

Application

Intended for venting the highest points in pressurized water pipelines

Design features

* **rated diameters DN 25**
* **mounting – internal 1″ or external 1 ½″ thread**
* **rubber seal EPDM or NBR**
* **brass gland**
* **connection screws – galvanized steel**
* **ball – stainless steel**

Technical specifications, standards

* **rated pressure PN 10/16**
* **temperature – max. 50°C**
* **anti-corrosive coating – powder paint**
* **high ingress protection**
* **automatic operation, maintenance-free**
* **easy installation and dismounting**
* **PZH certificate (Polish National Institute of Hygiene)**

BALL VENT FIG. 918

CAT NO. OD – 1300

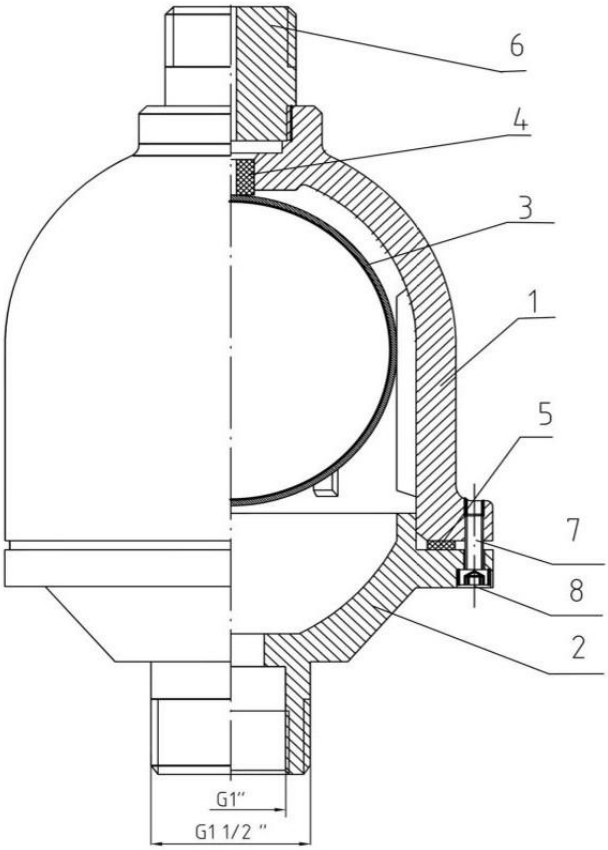

No.	Description	Pcs	Material	Standard
1	Body	1	EN-GJL-250	PN-EN 1561:2012
2	Cover	1	EN-GJL-250	PN-EN 1561:2012
3	Ball	1	X20CR13	PN-EN 10088-1:2014-12
4	Nozzle	1	EPDM	PN-ISO 1629:2017-06
5	O-ring seal	1	EPDM / NBR	PN-ISO 1629:2017-06
6	Gland	1	MO 58	PN-EN 12163:2011
7	Screw	4	S235JR	PN-EN ISO 4017:2014-09
8	Cap	4	PVC	PN-EN 12351:2010

BALL VENT FIG. 918 WITH FLANGE

CAT NO. OD – 1301

Application

Intended for venting the highest points in pressurized water pipelines or during filling

Design features

* **rated diameters DN 25**
* **mounting – internal 1″ thread**
* **rubber seal EPDM or NBR**
* **brass gland at the output of completed thread**
* **connection screws – galvanized steel**
* **ball – stainless steel**
* **ball valve (allows cleaning of the vent without disabling the system pressure)**

Technical specifications, standards

* **rated pressure PN 10/16**
* **temperature – max. 50°C**
* **flanged DN 50 – DN 150 acc. PN-EN 1092-2:1999**
* **anti-corrosive coating – powder paint**
* **high ingress protection**
* **easy installation and dismounting**
* **PZH certificate (Polish National Institute of Hygiene)**

BALL VENT FIG. 918 WITH FLANGE

CAT NO. OD – 1301

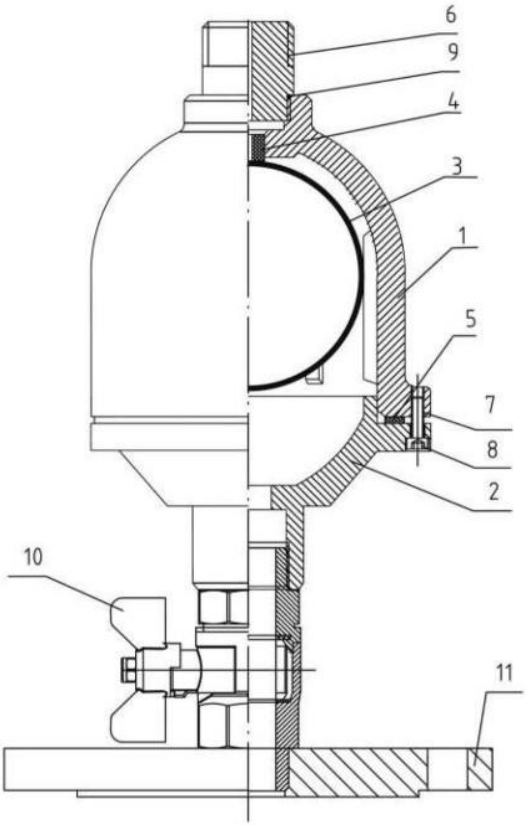

No.	Description	Pcs	Material	Standard
1	Body	1	EN-GJL-250	PN-EN 1561:2012
2	Cover	1	EN-GJL-250	PN-EN 1561:2012
3	Ball	1	X20CR13	PN-EN 10088-1:2014-12
4	Nozzle	1	EPDM	PN-ISO 1629:2017-06
5	O-ring seal	1	EPDM / NBR	PN-ISO 1629:2017-06
6	Gland	1	MO 58	PN-EN 12163:2011
7	Screw	4	S235JR	PN-EN ISO 4017:2014-09
8	Cap	4	PVC	PN-EN 12351:2010
9	O-ring seal	1	EPDM / NBR	PN-ISO 1629:2017-06
10	Ball valve	1	MO 58	PN-EN 13828:2005
11	Flange with thread	1	EN-GJL-250	PN-EN 1561:2012

REPAIR CLAMP

CAT NO. OP – 700

Application

To repair a single pipe section of steel, cast iron, PVC/PE water supply systems, sewage and industrial transporting other liquids chemically inert temp. 50°C

Design features

* **diameter range DN 15 – DN 250**
* **body – stainless steel X6CR17E**
* **seal EPDM (potable water) or NBR (sewage)**
* **bolts – galvanized steel**
* **high from 200mm to 300mm**

Technical specifications, standards

* **nominal pressure PN 10/16**
* **temperature – max. 50°C**

REPAIR CLAMP

CAT NO. OP – 700

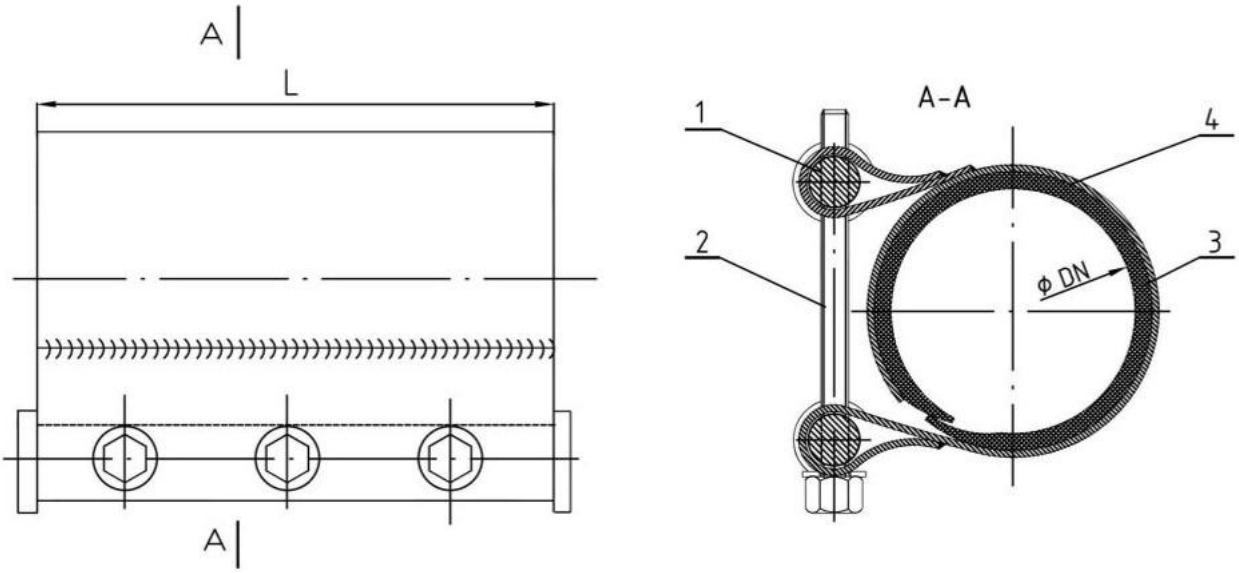

No.	Description	Pcs	Material	Standard
1	Bolt	2	X20CR13	PN-EN 10088-1:2014-09
2	Screw M 10x120 galvanized	3	S235 galvanized	DIN 933
3	Rubber	1	EPDM	PN-ISO 1629:2017-06
4	Plate g=0.8	1	X20CR13	PN-EN 10088-1:2014-09

DN	H	G
15	21 – 23 mm	100
20	26 – 28 mm	100
25	33 – 36 mm	100
32	42 – 44 mm	100
40	48 – 51 mm	100
50	56 – 61 mm	100 / 200
65	70 – 76 mm	100 / 200
80	88 – 98 mm	200
100	108 – 118 mm	200
125	133 - 144 mm	200
150	157 – 170 mm	200
200	222 – 232 mm	300
250	265 – 280 mm	300

EXTENSION SPINDLE FOR GATE VALVES AND HOT TAPS

CAT NO. OB – 600

Application

For controlling (closing and opening) gate valves and hot taps from the ground level

Design features

* **diameter range DN 25 – DN 250**
* **head and adapter made of gray cast iron GJL-250**
* **section, shaft made of corrosion protected steel**
* **protection pipes made of PE**
* **the head is connected with a pin or screw**
* **the adapter slotted mounting enables easy connection to gate valves**
* **the extension length may be customized to individual customer needs**

Technical specifications, standards

* **corrosion protection coating acc. to PN-EN 4624:2016-05**

EXTENSION SPINDLE FOR GATE VALVES AND HOT TAPS

CAT NO. OB – 600

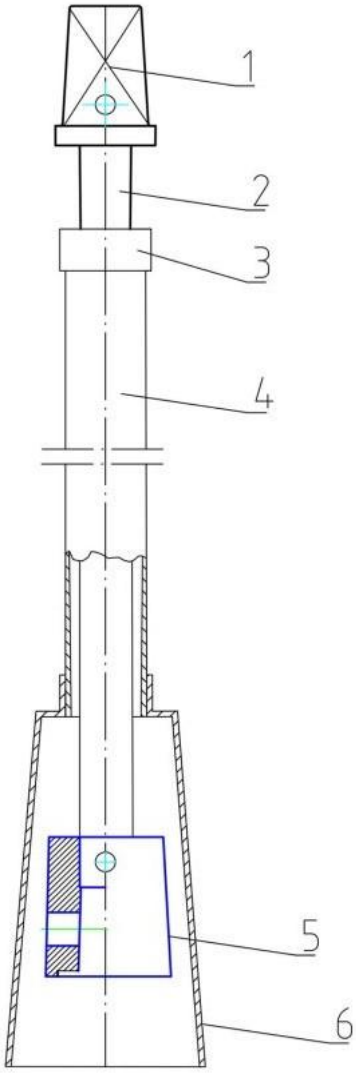

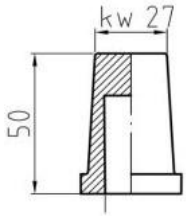

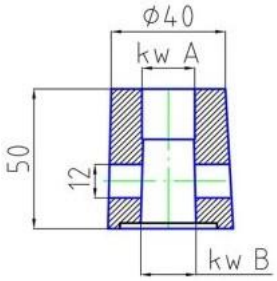

No.	Description	Pcs	Material	Standard
1	Spanner head	1	EN-GJL-250	PN-EN 1561:2012
2	Steel shaft	1	S235SE	PN-EN 10219-1:2007
3	PVC plug	1	PVC	PN-EN 1401-1:2019-07
4	PE protection pipe	1	PE	PN-EN 12201-2:2012
5	Bottom adapter	1	EN-GJS-500 EN-GJL-250	PN-EN 1563:2018-10 PN-EN 1561:2012
6	PVC bottom cover	1	PVC	PN-EN 1401-1:2019-07

DN	Kw A	Kw B
Spotters	0	0
32	14	14
45-50	14	16
80-100	16	20
150	18	22
200-250	18	23

ADJUSTABLE EXTENSION SPINDLE FOR GATE VALVES AND HOT TAPS

CAT NO. OB – 601

Application

For controlling (closing and opening) gate valves and hot taps from the ground level

Design features

* **diameter range DN 25 – DN 250**
* **head and adapter made of gray cast iron GJL-250**
* **section, shaft made of corrosion protected steel**
* **protection pipes made of PE**
* **the head is connected with a pin or screw**
* **the adapter slotted mounting enables easy connection to gate valves**
* **the extension length may be customized to individual customer needs**
* **the spindle height typically adjusted in the range between 1000 mm to 1700 mm**

Technical specifications, standards

* **corrosion protection coating acc. to PN-EN 4624:2016-05**

ADJUSTABLE EXTENSION SPINDLE FOR GATE VALVES AND HOT TAPS

CAT NO. OB – 601

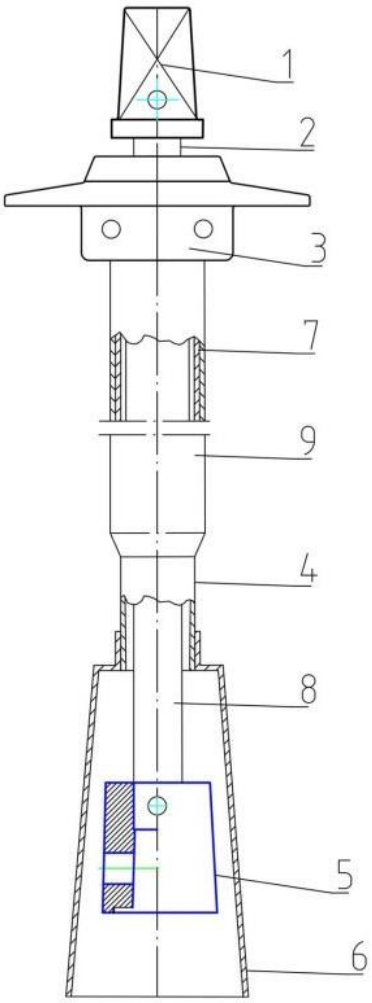

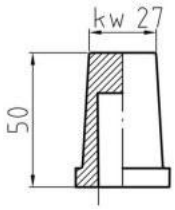

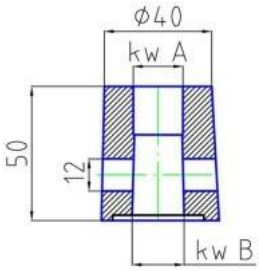

No.	Description	Pcs	Material	Standard
1	Spanner head	1	EN-GJL-250	PN-EN 1561:2012
2	Steel shaft	1	S235SE	PN-EN 10219-1:2007
3	Plug with PVC protection	1	PVC	PN-EN 1401-1:2019-07
4	PE protection pipe	1	PE	PN-EN 12201-2:2012
5	Bottom adapter	1	EN-GJS-500 EN-GJL-250	PN-EN 1563:2018-10 PN-EN 1561:2012
6	PVC bottom cover	1	PVC	PN-EN 1401-1:2019-07
7	Square section	1	S235	PN-EN 10219-1:2007
8	Square steel shaft	1	S235	PN-EN 10219-1:2007
9	PE protection pipe	1	PE	PN-EN 12201-2:2012

DN	Kw A	Kw B
Spotters	0	0
32	14	14
45-50	14	16
80-100	16	20
150	18	22
200-250	18	23

FLANGED TEE “T”

CAT NO. K – 500

Application

Intended for connecting flanged fittings in water supply systems, sewerage systems and industrial installations transporting other chemically inert liquids of up to 50°C

Design features

* **diameter range DN 50 – DN 400**
* **body – gray cast iron GJL-250**
* **black bituminous paint or powder coating RAL 5005**

Technical specifications, standards

* **flange compliant with PN-EN 1092-2:1999**
* **rated pressure PN 10/16**
* **paints with drinking water approval**
* **material PN-EN 1561-2012**

FLANGED TEE "T"

CAT NO. K – 500

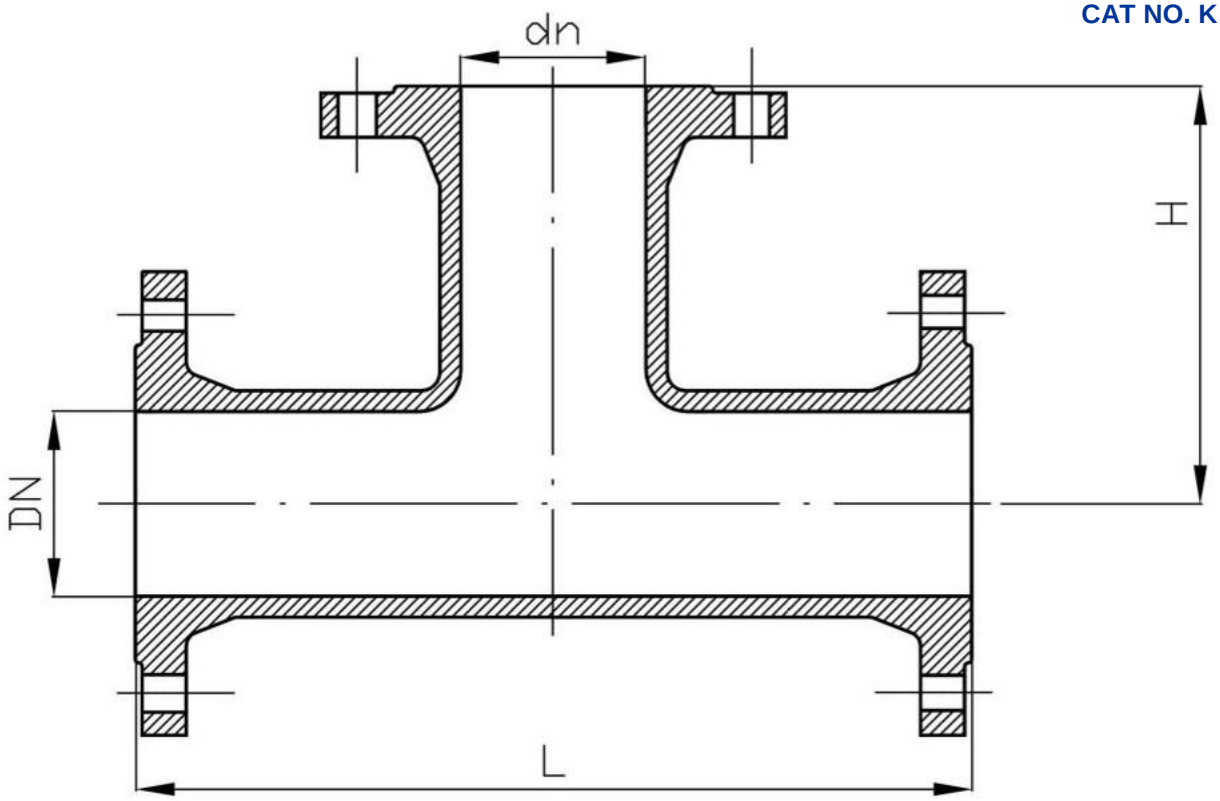

FLANGED TEES "T"													
DN	50	80	80	100	100	100	150	150	150	200	200	200	200
Dn	50	50	80	50	80	100	80	100	150	80	100	150	200
L	310	335	335	365	365	365	445	445	445	525	525	525	525
H	155	165	165	175	180	180	215	215	220	240	245	255	260
FLANGED TEES "T"													
DN	250	250	250	250	250	300	300	300	300	400	400	400	400
Dn	80	100	150	200	250	80	100	150	200	200	250	300	400
L	700	700	700	700	700	800	800	800	800	900	900	900	900
H	265	275	300	325	350	290	300	325	350	350	350	450	450

BARE - FLANGED TEE "TBK"

CAT NO. K – 501

Application

Intended for connecting flanged fittings in water supply systems, sewerage systems and industrial installations transporting other chemically inert liquids of up to 50°C

Design features

* **diameter range DN 80 – DN 200**
* **body – gray cast iron GJL-250**
* **black bituminous paint or powder coating RAL 5005**

Technical specifications, standards

* **flange compliant with PN-EN 1092-2:1999**
* **rated pressure PN 10/16**
* **paints with drinking water approval**
* **material PN-EN 1561-2012**

BARE - FLANGED TEE "TBK"

CAT NO. K – 501

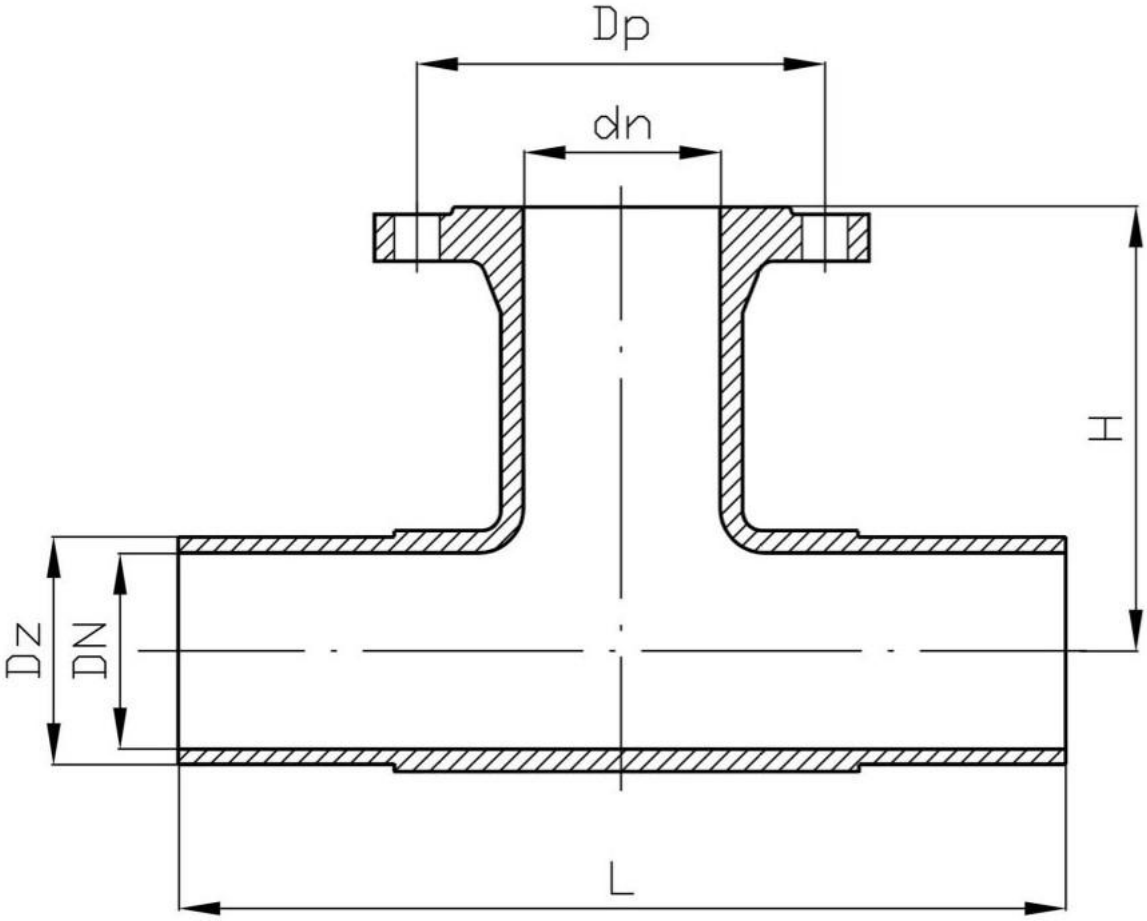

BARE FLANGED TEES "TBK"								
DN	80	80	100	100	100	150	150	200
Dn	50	80	50	80	100	80	100	80
L	310	310	400	400	400	450	450	550
H	180	200	200	210	200	200	240	240
Dz	90	90	110	110	110	160	160	225
Dp	125	160	125	160	180	160	180	160

DOUBLE FLANGED FF STUB PIPES

CAT NO. K – 502

Application

Intended for connecting flanged fittings in water supply systems, sewerage systems and industrial installations transporting other chemically inert liquids of up to 50°C

Design features

* **diameter range DN 50 – DN 400**
* **body – gray cast iron GJL-250**
* **black bituminous paint or powder coating RAL 5005**

Technical specifications, standards

* **flange compliant with PN-EN 1092-2:1999**
* **rated pressure PN 10/16**
* **paints with drinking water approval**
* **material PN-EN 1561-2012**

DOUBLE FLANGED FF STUB PIPES

CAT NO. K – 502

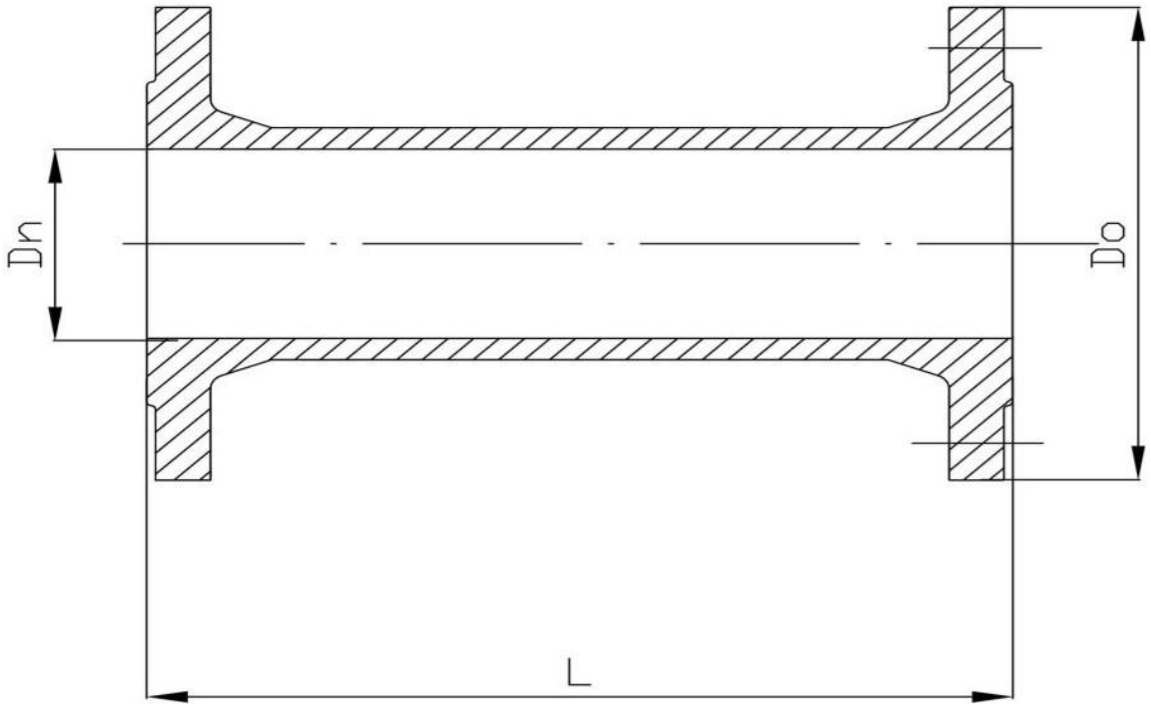

DOUBLE FLANGED FF STUB PIPES								
SIZE	Dn	Do	L		SIZE	Dn	Do	L
50x200	50	165	200		100x200	100	220	200
50x300	50	165	300		100x300	100	220	300
50x400	50	165	400		100x400	100	220	400
50x700	50	165	700		100x500	100	220	500
50x800	50	165	800		100x600	100	220	600
50x1000	50	165	1000		100x700	100	220	700
80x100	80	200	100		100x800	100	220	800
80x150	80	200	150		100x1000	100	220	1000
80x200	80	200	200		150x300	150	285	300
80x300	80	200	300		150x400	150	285	400
80x400	80	200	400		150x500	150	285	500
80x500	80	200	500		150x800	150	285	800
80x600	80	200	600		150x1000	150	285	1000
80x700	80	200	700		200x200	200	340	200
80x800	80	200	800		200x300	200	340	300
80x1000	80	200	1000		200x400	200	340	400
					200x500	200	340	500

FW STUB PIPES

CAT NO. K – 504

Application

Intended for connecting flanged fittings in water supply systems, sewerage systems and industrial installations transporting other chemically inert liquids of up to 50°C

Design features

* **diameter range DN 50 – DN 300**
* **body – gray cast iron GJL-250**
* **black bituminous paint or powder coating RAL 5005**

Technical specifications, standards

* **flange compliant with PN-EN 1092-2:1999**
* **rated pressure PN 10/16**
* **paints with drinking water approval**

FW STUB PIPES

CAT NO. K – 504

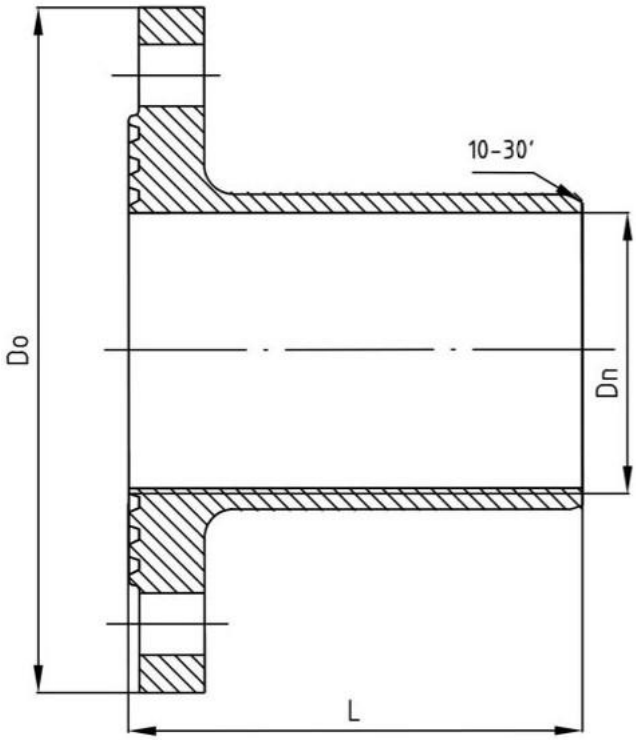

FW STUB PIPES			
SIZE	Dn	Do	L
50	50	165	95
80	80	200	110
80	80	200	135
100	100	220	120
100	100	220	145
150	150	285	180
200	200	340	170
250	250	400	255
300	300	440	270

FLANGED ELBOW Q

CAT NO. K – 505

FLANGED ELBOW N WITH FOOT

CAT NO. K – 506

Application

Intended for connecting flanged fittings in water supply systems, sewerage systems and industrial installations transporting other chemically inert liquids of up to 50°C

Design features

* **diameter range DN 50 – DN 400**
* **body – gray cast iron GJL-250**
* **black bituminous paint or powder coating RAL 5005**

Technical specifications, standards

* **flange compliant with PN-EN 1092-2:1999**
* **rated pressure PN 10/16**
* **paints with drinking water approval**
* **material PN-EN 1561-2012**

FLANGED ELBOW Q

CAT NO. K – 505

Flanged Q Elbow

Size	DN	L
Q 50	50	150
Q 80	80	165
Q 100	100	180
Q 150	150	220
Q 200	200	260
Q 250	250	360
Q 300	300	365

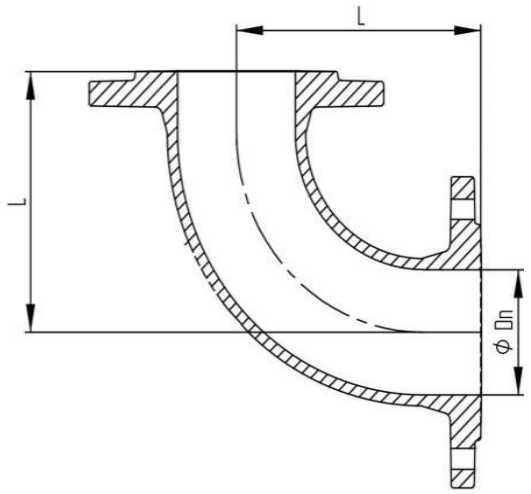

FLANGED ELBOW N WITH FOOT

CAT NO. K – 506

Flanged N Elbow with foot

Size	DN	L
N 80	80	165
N 100	100	180
N 150	150	220
N 200	200	260

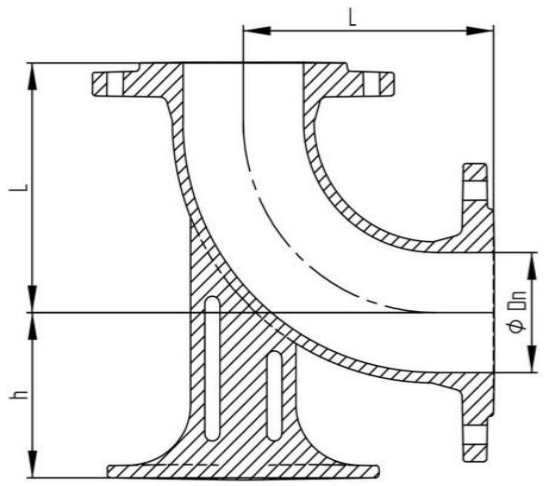

FLANGED REDUCER FFR

CAT NO. K – 507

Application

Intended for connecting flanged fittings with different nominal diameters in water supply systems and industrial installations transporting other chemically inert liquids

Design features

* **diameter range DN 80 – DN 400**
* **body – gray cast iron GJL-250**
* **black bituminous paint or powder coating RAL 5005**

Technical specifications, standards

* **flange compliant with PN-EN 1092-2:1999**
* **rated pressure PN 10/16**
* **paints with drinking water approval**

FLANGED REDUCER FFR

CAT NO. K – 507

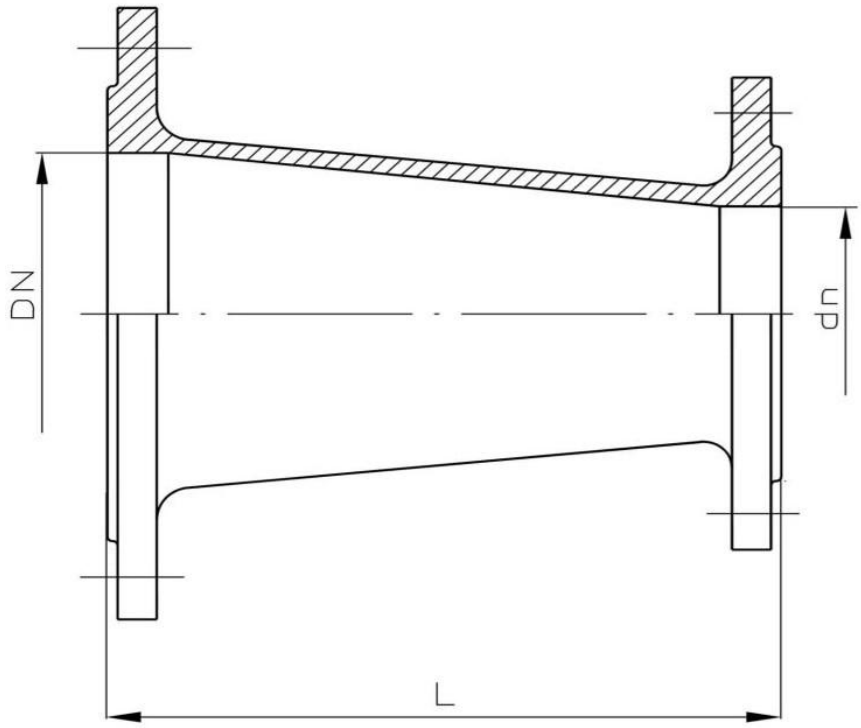

FW STUB PIPES			
SIZE	Dn	Do	L
80 / 50	80	50	105
100 / 50	100	50	205
100 / 80	100	80	105
100 / 80	100	80	210
150 / 80	150	80	160
150 / 100	150	100	160
200 / 100	200	100	160
200 / 150	200	150	160
250 / 150	250	150	160
250 / 200	250	200	160
300 / 150	300	150	400
300 / 200	300	200	300
300 / 250	300	250	320
400 / 300	400	300	210

CAST IRON BLIND FLANGE “X”

CAT NO. K – 508

Application

Intended for plugging water pipes

Design features

* **diameter range DN 50 – DN 400**
* **body – gray cast iron GJL-250 or ductile cast iron GJS-500**

Technical specifications, standards

* **operating pressure (PFA): 10/16 bar**
* **scope of application: drinking water or non-aggressive liquids without solid content**
* **flange connection requirements as per: PN-EN 1092-2:1999**
* **protective bituminous or powder coating**

CAST IRON BLIND FLANGE "X"

CAT NO. K – 508

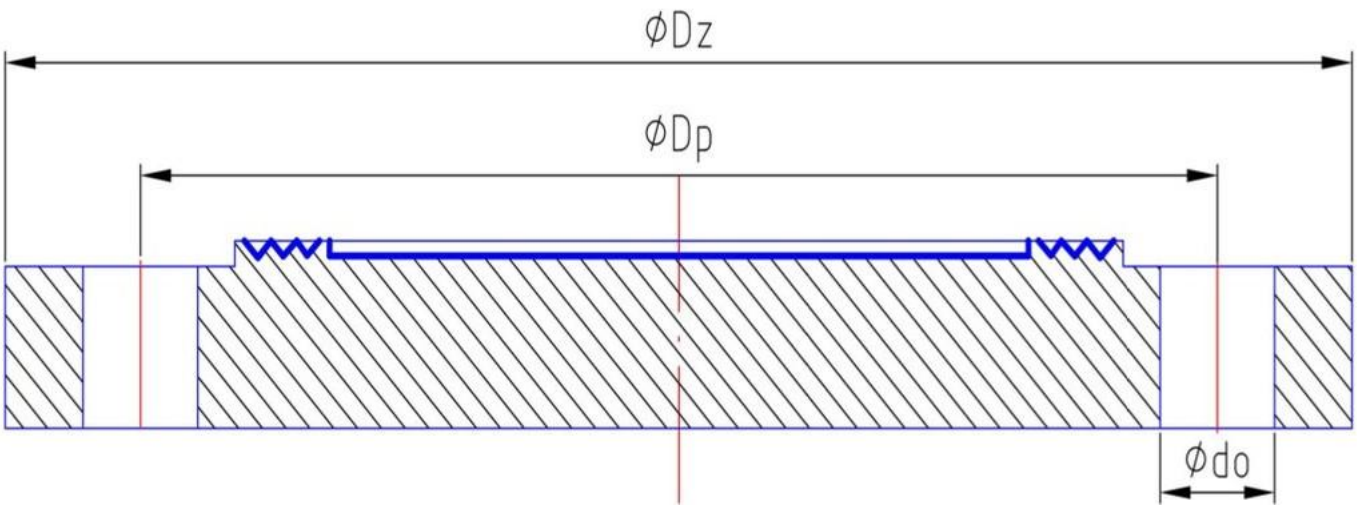

DN	Dp	Dz	do	holes	PN
50*	125	165	18	4	10/16
65*	145	185	18	4	10/16
80*	160	200	18	4 / 8	10/16
100*	180	220	18	8	10/16
125*	210	250	18	8	10/16
150*	240	285	22	8	10/16
200*	295	340	22	8	10/16
250	350	395	22	12	10
250*	355	400	28	12	16
300	400	445	22	12	10
400	515	565	28	16	10

***available ductile cast iron GJS-500 version for PN 16 pressure**

THREADED FLANGE

CAT NO. K – 509

Application

Intended for plugging water pipes

Design features

* **diameter range DN 50 – DN 400**
* **body – gray cast iron GJL-250 or ductile cast iron GJS-500**

Technical specifications, standards

* **operating pressure (PFA): 10/16 bar**
* **scope of application: drinking water or non-aggressive liquids without solid content**
* **flange connection requirements as per: PN-EN 1092-2:1999**
* **protective powder coating**

THREADED FLANGE

CAT NO. K – 509

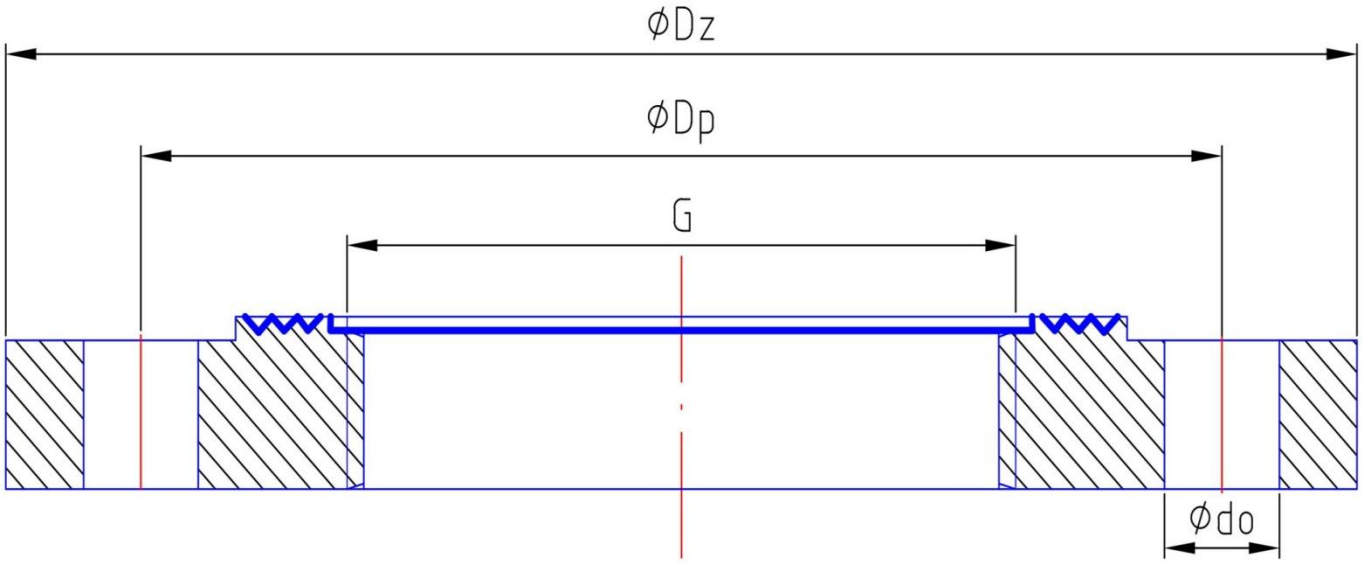

DN	G	Dp	Dz	do	holes	PN
50*	1", 1 ¼", 1 ½", 2"	125	165	18	4	10/16
65*	1", 1 ¼", 1 ½", 2", 2 ½"	145	185	18	4	10/16
80*	1", 1 ¼", 1 ½", 2", 2 ½", 3"	160	200	18	4 / 8	10/16
100*	1", 1 ¼", 1 ½", 2", 2 ½", 3", 4"	180	220	18	8	10/16
125*	1", 1 ¼", 1 ½", 2", 2 ½", 3", 4"	210	250	18	8	10/16
150*	1", 1 ¼", 1 ½", 2", 2 ½", 3", 4"	240	285	22	8	10/16
200*	1", 1 ¼", 1 ½", 2", 2 ½", 3", 4"	295	340	22	8	10/16
250	1", 1 ¼", 1 ½", 2", 2 ½", 3", 4"	350	395	22	12	10
250*	1", 1 ¼", 1 ½", 2", 2 ½", 3", 4"	355	400	28	12	16
300	1", 1 ¼", 1 ½", 2", 2 ½," 3", 4"	400	445	22	12	10
400	1", 1 ¼", 1 ½", 2", 2 ½", 3", 4"	515	565	28	16	10

***available ductile cast iron GJS-500 version for PN 16 pressure**

STEEL MANHOLE TYPE “WAŁCZ”

CAT NO. W – 1100

Application

Used as a top of chambers

Design features

* **cover domed**
* **adapted for mounting anchors or bricking in the crown opening**
* **adapted for padlock**

Technical specifications, standards

* **self – supporting cover sheet 4 mm**
* **ring sheet 5 mm**
* **protected against corrosion bituminous paint**
* **the ability to perform on special order version with additional cover**

Przedsiębiorstwo Inżynieryjno - Przemysłowe “WODROL” Wałcz Spółka z o.o.
Chełmińska street No. 6, 78-600 Wałcz, Poland
NIP (TAX ID) 765 10 71 186
(067) 258 32 91, (067) 250 07 78
handel@wodrol-walcz.pl, wodrol@wodrol-walcz.pl
www.wodrol-walcz.pl

STEEL MANHOLE TYPE "WAŁCZ"

CAT NO. W – 1100

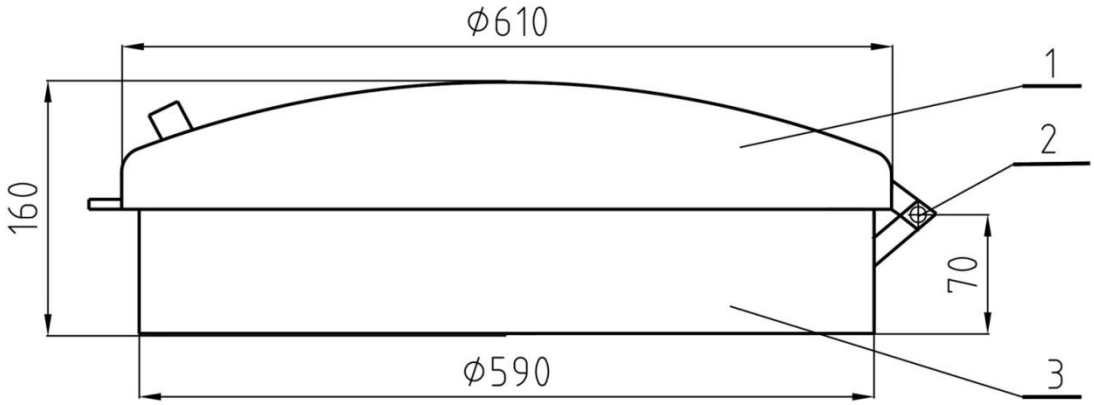

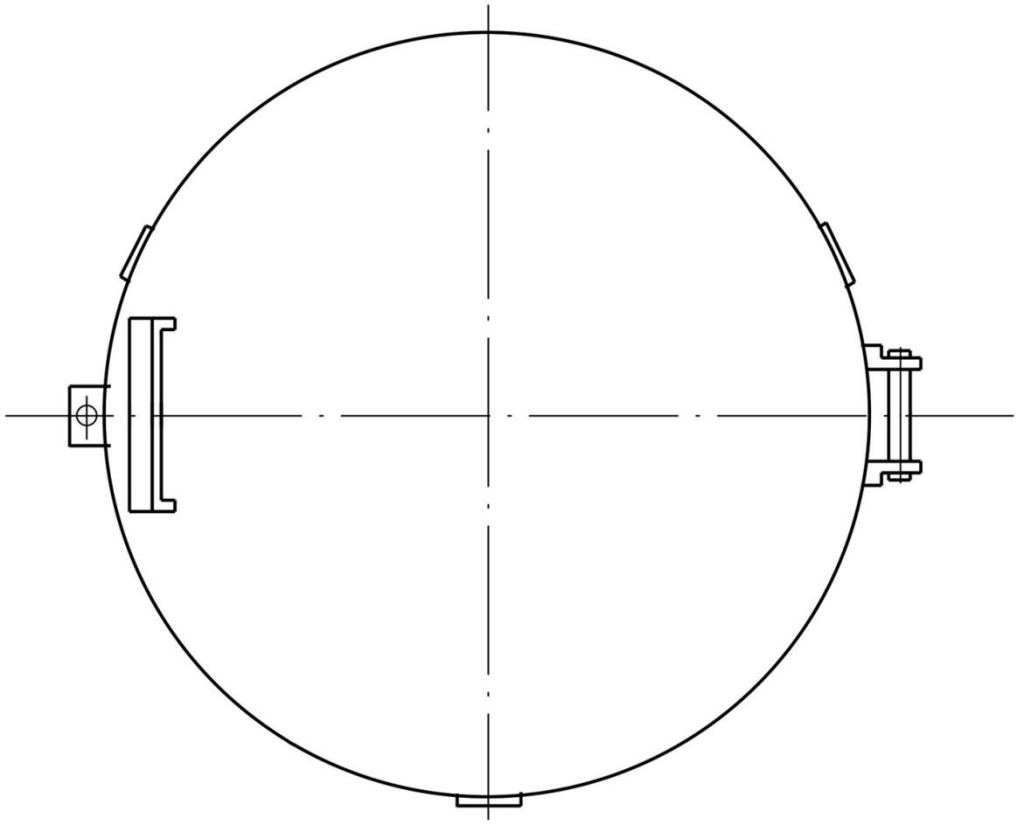

No.	Description	Pcs	Material	Standard
1	Cover sheet g=4	1	S235JR	PN-EN 10051:2011
2	Bolt	1	S235JR	PN-EN 10051:2011
3	Ring 80x5	1	S235JR	PN-EN 10060:2006

STREET BOXES

CAT NO. S – 1001

Application

Boxes are designed for installation in the sidewalk, roadway, paved in order to secure access to controls gate valves, spotters, hydrants from the surface of the ground

Designs features

* **body made of gray cast iron GJL-250**
* **cover gray cast iron GJL-250**
* **protected with bituminous paint**
* **bolt connecting the body of the lid galvanized steel – protected against twisting**
* **high stability and high load capacity**
* **resistant to all external factors**

Technical specifications, standards

* **the size and dimensions of the building by the table**

Name	High	Weight
Small box for spotter	H – 150	3,00
Medium box for gate valves	H - 200	5,40
Box for gate valve	H – 270	14,2
Street box for hydrant underground	H – 310	32,4

STREET BOX WITH PEHD

CAT NO. S – 1000

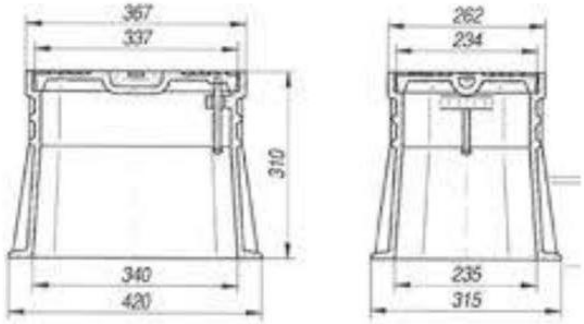

Application

Boxes are designed for installation in the sidewalk, roadway, paved in order to secure access to controls gate valves, spotters, hydrants from the surface of the ground

Design features

* **body made of plastic – PEHD polyamide**
* **cover gray cast iron GJL-250**
* **protected with bituminous paint**
* **bolt connecting the body of the lid galvanized steel – protected against twisting**
* **high stability and high load capacity**
* **low weight**
* **resistant to all external factors**

Technical specifications, standards

* **the size and dimensions of the building by the table**

Name	High	Weight
Small box for spotter PEHD	H – 150	1,00
Street box for gate valve PEHD	H – 270	4,00
Street box for hydrant underground PEHD	H – 310	11,00

Wodrol · Wałcz

Przedsiębiorstwo Inżynieryjno - Przemysłowe “WODROL” Wałcz Spółka z o.o.
Chełmińska street No. 6, 78-600 Wałcz, Poland
NIP (TAX ID) 765 10 71 186
(067) 258 32 91, (067) 250 07 78
handel@wodrol-walcz.pl, wodrol@wodrol-walcz.pl
www.wodrol-walcz.pl